A Project Report on

Next-Gen Intelligent Vehicle System for Enhanced Safety and Secure Access

submitted in partial fulfillment of the requirement for the award of the Degree of

BACHELOR OF TECHNOLOGY

By

SHAIK YAHIYA AHAMMED (22AT1A3539)
PINJARI APSAR (23AT5A3507)
KATIKA NASEER (22AT5A3504)
KATIKA JAYAPRAKASH (22AT1A3516)

Under the Guidance of

Mr. P. Vishnu Kumar M.Tech, (Ph.D)

Assistant Professor

GPCET
Pioneering Innovative Education

DEPARTMENT OF COMPUTER SCIENCE AND ENGINEERING-INTERNET OF THINGS

G. PULLAIAH COLLEGE OF ENGINEERING AND TECHNOLOGY

(Autonomous)

(Approved by AICTE | NAAC Accreditation with 'A' Grade | Accredited by NBA (ECE,CSE & EEE) | Permanently Affiliated to JNTUA)

2022-2026

G. PULLAIAH COLLEGE OF ENGINEERING AND TECHNOLOGY

(Autonomous)

(Approved by AICTE | NAAC Accreditation with 'A' Grade | Accredited by NBA (ECE,CSE & EEE) | Permanently Affiliated to JNTUA)

DEPARTMENT OF COMPUTER SCIENCE AND ENGINEERING-INTERNET OF THINGS

GPCET

Pioneering Innovative Education

CERTIFICATE

This is to certify that the project report entitled **"Next-Gen Intelligent Vehicle System For Enhanced Safety And Secure Access"** being submitted by **SHAIK YAHIYA AHAMMED (22AT1A3539),PINJARI APSAR (23AT5A3507), KATIKA NASEER (22AT5A3504), KATIKA JAYAPRAKASH (22AT1A3516)** in partial fulfillment of the requirement for the award of the degree of Bachelor of Technology in Computer Science And Engineering- Internet Of Things of G.Pullaiah College of Engineering and Technology, Kurnool is a record of bonafide work carried out by them under my guidance and supervision.

P. Vishnu Kumar M.Tech, (Ph.D)
Project Supervisor

Dr.P. Suman Prakash M.Tech , Ph.D
Head of the Department

Date of Viva-Voce_____

INTERNAL EXAMINER

EXTERNAL EXAMINER

DECLARATION

We hereby declare that this project work entitled "**Next-Gen Intelligent Vehicle System for Enhanced Safety and Secure Access**" in partial fulfillment of requirements for the award of degree of computer Science and engineering- Internet of Things is a bonafied work carried out by us during the academic year 2022- 2026.

We further declare that this project is a result of our effort and has not been submitted for the award of any degree by us to any institute.

.

By

SHAIK YAHIYA AHAMMED (22AT1A3539)
PINJARI APSAR (23AT5A3507)
KATIKA NASEER (22AT5A3504)
KATIKA JAYAPRAKASH (22AT1A3516)

ACKNOWLEDGEMENT

We are extremely grateful to Chairman, **Sri G.V.M.Mohan Kumar** of G.Pullaiah College of Engineering and Technology, Kurnool, Andhra Pradesh for their good blessings.

We owe indebtedness to our Principal **Dr.C.Srinivasa Rao** **M.E., Ph.D.**G.Pullaiah College of Engineering and Technology, Kurnool for providing us the required facilities.

We would like to express our deep sense of gratitude and our sincere thanks to HOD **Dr.P.Suman Prakash** **M.Tech., Ph.D.** Department of Internet of Things G.Pullaiah College of Engineering and Technology, Kurnool for providing the necessary facilities and encouragement towards the project work.

We thank our project supervisor, **Mr.P.Vishnu Kumar** **M.Tech,(Ph.D)** for his guidance, valuable suggestions and support in the completion of the project.

We gratefully acknowledge and express our thanks to teaching and non-teaching staff of IoT Department.

We would like to express our love and affection to our parents for their encouragement throughout this project work.

Project Associates

SHAIK YAHIYA AHAMMED (22AT1A3539)
PINJARI APSAR (23AT5A3507)
KATIKA NASEER (22AT5A3504)
KATIKA JAYAPRAKASH (22AT1A3516)

ABSTRACT

The development of intelligent vehicle systems plays an important role in improving vehicle security, driver safety, and driving comfort. This project proposes a Next-Generation Intelligent Vehicle System that integrates biometric authentication and intelligent driver monitoring to ensure secure access and safe vehicle operation. The system uses Python-based face recognition to verify the driver's identity before allowing the engine to start, thereby preventing unauthorized access and vehicle theft. In addition, a Kodular-based mobile application enables users to unlock vehicle doors using the smartphone’s fingerprint sensor, providing an additional layer of security and convenient access control.

To enhance driver safety, the system employs a Python-based drowsiness detection mechanism that monitors eye movements and generates real-time alerts when fatigue is detected. The system also incorporates alcohol detection, accident detection with GSM/GPS-based emergency alerts, and seatbelt monitoring to improve road safety. By integrating biometric authentication, intelligent monitoring, and mobile-based security, the proposed system provides a reliable, cost-effective, and comprehensive solution for enhancing both vehicle safety and security in modern transportation systems.

TABLE OF CONTENTS

TOPICS	PAGE NO'S
ABSTRACT	
CONTENTS	
LIST OF FIGURES	
1. INTRODUCTION	1
1.1 Overview	2
1.2 Objective of the Project	3
2. LITERATURE REVIEW	5
3. SYSTEM ANALYSIS	8
3.1 Software Development Lifecycle	9
3.2 Overview of IoT Technology	9
3.3 Features of IoT	11
3.4 Functions of IoT	11
3.5 Applications of IoT	12
3.6 IoT Layered Architecture	12
3.7 Existing Methods	14
3.7.1 Challenges in Automotive	14
3.7.2 Inadequate Vehicle Tracking	14
3.7.3 Insufficient Fatigue Detection	14
3.8 Proposed Methods	15
3.8.1 Accident Alert	15
3.8.2 Alcohol Detection	16
3.8.3 Real Time Vehicle Tracking	17
3.8.4 Driver Fatigue Detection	18
3.8.5 Seat Belt Alert	19
3.8.6 Face Recognition for Secure	20
3.9 Features of this project	21
4. SYSTEM REQUIREMENTS SPECIFICATION	23
4.1 Hardware Requirements	24

4.1.1 ESP32 Microcontroller 24
4.1.2 GSM Module 25
4.1.3 GPS Module 26
4.1.4 Vibration Sensor 26
4.1.5 Eyeblink Sensor 27
4.1.6 MQ-3 Sensor 28
4.1.7 Servo Motor 29
4.2 Software Requirements 31
4.2.1 Arduino IDE 31
4.2.2 MQTT 31

5. SOFTWARE ENVIRONMENT 33
5.1 Arduino programming 34
5.2 Functionalities of Arduino Programming 35

6. SYSTEM DESIGN 37
6.1 Circuit Diagrams 38
6.1.1 ESP32 Circuit Diagram 38
6.2 Block Diagram 39

7. SYSTEM IMPEMENTATION 41
7.1 Modules used in project 42
7.2 Pseudocode 43

8. SYSTEM RESULTS 45
8.1 System Results 46
8.2 Screen Shots 47
8.2.1 Graphical User Interface 47
8.2.2 Real Time Face Recognition 47
8.2.3 Next-Gen Intelligent Vehicle System 48

9. CONCLUSION AND FUTURE SCOPE 49
9.1 Conclusion 50
9.2 Future Scope 51
10. REFERENCES 52

LIST OF FIGURES

Figure 3.1	Software Development Life Cycle	9
Figure 3.6	IoT Layered Architecture	12
Figure 4.1.1	ESP32 Microcontroller	24
Figure 4.1.2	GSM Module	25
Figure 4.1.3	GPS Module	26
Figure 4.1.4	Vibration Sensor	27
Figure 4.1.5	Eyeblink Sensor	28
Figure 4.1.6	MQ3 Sensor	29
Figure 4.1.7	Servo Motor	30
Figure 6.1.1	ESP32 Circuit Diagram	38
Figure 6.2	Block Diagram	39
Figure 8.2.1	Graphical User Interface	47
Figure 8.2.2	Real Time Face Recognition	47
Figure 8.2.3	Next-Gen Intelligent Vehicle System Kit	48

1

INTRODUCTION

1. INTRODUCTION

1.1 Overview

The rapid advancement of intelligent technologies has significantly transformed the automotive industry, leading to the development of smart vehicle systems that enhance safety, security, and driving comfort. Traditional vehicles mainly rely on mechanical systems and basic electronic controls, which often lack advanced security and monitoring capabilities. As the number of vehicles on the road continues to increase, issues such as vehicle theft, driver fatigue, and road accidents have become major concerns worldwide. These challenges highlight the need for intelligent vehicle systems that can integrate modern technologies to provide improved security mechanisms and real-time monitoring of driver behavior.

In recent years, embedded systems, artificial intelligence, and computer vision technologies have played an important role in developing smart transportation solutions. Intelligent vehicle systems are designed to combine hardware sensors, communication modules, and advanced software algorithms to create safer and more secure driving environments. By integrating technologies such as biometric authentication, driver monitoring, and wireless communication, modern vehicles can prevent unauthorized access, detect risky driving conditions, and respond quickly during emergency situations. These systems not only improve vehicle protection but also help in reducing accidents and improving overall road safety.

The proposed Next-Generation Intelligent Vehicle System focuses on enhancing vehicle security through biometric authentication and intelligent monitoring mechanisms. The system uses Python-based face recognition technology to verify the identity of the driver before allowing the vehicle engine to start. This method ensures that only authorized individuals can operate the vehicle, thereby preventing unauthorized access and reducing the chances of vehicle theft. In addition, a mobile application developed using Kodular enables users to unlock the vehicle doors using the fingerprint sensor available on their smartphones, providing an additional layer of secure and convenient access control.

Apart from security, the system also emphasizes driver safety by incorporating a real-time drowsiness detection mechanism. Driver fatigue is one of the major causes of road accidents, especially during long-distance driving. To address this issue, the system uses a Python-powered computer vision technique that continuously monitors the driver's eye movements and detects signs of drowsiness. When fatigue or sleepiness is identified, the system immediately generates alerts to warn the driver, helping to prevent potential accidents. This intelligent monitoring system replaces conventional hardware-based eye blink sensors with a more accurate and reliable software-based solution.

Furthermore, the proposed system integrates several additional safety modules, including alcohol

detection, accident detection, and seatbelt monitoring, to create a comprehensive vehicle safety framework. In the event of an accident, the system utilizes GSM and GPS technologies to automatically send emergency alerts along with the vehicle's location to predefined contacts or authorities. By combining biometric security, intelligent driver monitoring, and automated emergency response, the Next-Generation Intelligent Vehicle System provides a cost-effective and reliable solution for improving both vehicle security and road safety in modern transportation systems.

1.2 Objective of the Project

Secure Vehicle Access:

One of the main objectives of this project is to improve vehicle security by implementing a biometric authentication system. The system uses Python-based face recognition technology to verify the identity of the driver before allowing the vehicle to start. This ensures that only authorized individuals can operate the vehicle, thereby reducing the risk of theft and unauthorized access.

Mobile-Based Door Unlocking:

Another objective of the system is to provide a convenient and secure method for unlocking vehicle doors through a mobile application. A Kodular-based app is developed that uses the smartphone's fingerprint sensor to authenticate the user and unlock the vehicle doors. This adds an additional layer of security and enhances user convenience.

Driver Drowsiness Detection:

The project aims to enhance driver safety by implementing a real-time drowsiness detection system using Python and computer vision techniques. The system continuously monitors the driver's eye movements and detects signs of fatigue or sleepiness. When drowsiness is detected, the system immediately generates alerts to warn the driver and help prevent accidents.

Alcohol Detection for Safe Driving:

Another key objective of the project is to prevent drunk driving by integrating an alcohol detection module. The system detects the presence of alcohol from the driver and restricts the vehicle from starting if alcohol levels exceed the safe limit, thereby reducing the chances of accidents caused by impaired driving.

Accident Detection and Emergency Alerts:

The proposed system also focuses on improving emergency response during accidents. By integrating GPS and GSM modules, the system can automatically detect accidents and send location-based alerts to emergency contacts or authorities. This helps ensure quick assistance and reduces the impact of accidents.

This project addresses critical aspects of road safety, acknowledging the multifaceted nature of the challenges faced. By developing a comprehensive Intelligent Vehicle Safety System, the aim is to significantly contribute to reducing accidents, injuries, and fatalities on our roadways.

solution to detect alcohol consumption in drivers and prevent them from operating vehicles under the influence remains paramount.

Another significant challenge is the lack of real-time monitoring and tracking mechanisms for vehicles, hindering the ability to respond swiftly to accidents or emergencies. The absence of comprehensive real-time vehicle tracking systems leaves drivers and passengers vulnerable, especially in situations where immediate assistance is crucial.

Driver fatigue poses yet another serious threat to road safety. The inability to promptly identify and address instances of drowsy driving contributes to a considerable portion of accidents. Traditional methods of monitoring driver alertness have proven insufficient, necessitating a more advanced and reliable solution.

Accident detection and response mechanisms also present a notable gap in current road safety measures. The inability to swiftly and accurately detect accidents and notify emergency services hampers the timely provision of assistance, potentially exacerbating the severity of injuries and damage.

In response to these challenges, the proposed Intelligent Vehicle Safety System seeks to address the problem of alcohol-impaired driving through advanced alcohol detection mechanisms. Additionally, the system aims to bridge the gap in real-time vehicle tracking, enhancing overall safety and responsiveness. By incorporating a driver sleep alert feature, the project endeavors to mitigate the risks associated with drowsy driving. Finally, the Accident Alert system aims to provide an immediate and precise response to accidents, minimizing the impact of such incidents on road safety.

This project addresses critical aspects of road safety, acknowledging the multifaceted nature of the challenges faced. By developing a comprehensive Intelligent Vehicle Safety System, the aim is to significantly contribute to reducing accidents, injuries, and fatalities on our roadways.

2

LITERATURE REVIEW

2. LITERATURE REVIEW

The integration of Internet of Things (IoT) technologies in the automotive industry has gained considerable attention in recent years, particularly in the development of intelligent systems aimed at enhancing vehicle safety and security. Researchers have explored various IoT-based solutions that combine sensors, communication technologies, and data processing techniques to improve driver safety, monitor vehicle conditions, and respond quickly during emergencies. These intelligent vehicle systems play a crucial role in reducing road accidents and improving overall transportation efficiency.

1. Sensor Integration and Data Processing

Sensor integration plays a vital role in the development of intelligent vehicle safety systems. Research conducted by Li et al. (2020) emphasized the importance of integrating multiple sensors such as vibration sensors, alcohol sensors, and eye blink sensors to effectively monitor driver behavior and vehicle conditions. The study highlighted that combining data from multiple sensors can significantly improve the accuracy and reliability of safety systems. In addition, Zhao et al. (2019) explored real-time data processing techniques for IoT-based vehicle safety applications. Their research suggested the use of edge computing to process data closer to the device, thereby reducing latency and enabling faster responses during critical situations.

2. Accident Detection and Emergency Response

Accident detection and rapid emergency response systems are essential components of modern vehicle safety technologies. Jin et al. (2018) developed an IoT-based Accident Alert System capable of automatically detecting collisions and notifying emergency services. Their research demonstrated that automated alert systems could significantly reduce response times compared to traditional manual reporting methods. Similarly, Wang et al. (2021) focused on improving communication protocols between IoT devices and emergency services to ensure reliable and efficient transmission of accident data and location information.

3. Real-Time Vehicle Tracking

Real-time vehicle tracking systems utilize GPS and cellular communication technologies to continuously monitor the location of a vehicle. These systems provide several advantages, including improved vehicle security, efficient fleet management, and faster recovery of stolen vehicles. Advanced tracking systems also incorporate geofencing, which creates virtual boundaries and triggers alerts when a vehicle moves outside predefined areas. Real-time tracking enhances safety by enabling quick responses to emergencies, unauthorized vehicle usage, or theft incidents.

4. Alcohol Detection

Alcohol-impaired driving remains one of the leading causes of road accidents worldwide. Researchers such as Smith et al. (2019) and Jones et al. (2020) investigated IoT-based alcohol detection systems that utilize MQ-3 alcohol sensors to detect the presence of alcohol in the vehicle environment. Their studies highlighted the importance of accurate alcohol detection systems to prevent drivers under the influence from operating vehicles. These systems help improve road safety by restricting vehicle operation when alcohol levels exceed safe limits.

5. Driver Behavior Monitoring

Monitoring driver behavior is another important aspect of intelligent vehicle safety systems. Studies conducted by Zhang et al. (2017) and Chen et al. (2019) explored IoT-based systems that monitor driver conditions such as fatigue, distraction, and alcohol consumption. These systems utilize sensors and cameras to analyze driver behavior and provide real-time alerts when risky conditions are detected. Furthermore, Liang et al. (2020) proposed a machine learning-based fatigue detection system using data collected from eye blink sensors. Their approach achieved high accuracy in detecting drowsy driving behavior and demonstrated the effectiveness of intelligent monitoring systems.

6. Environmental Monitoring and Fuel Management

Apart from safety features, some research has focused on the integration of IoT technologies for environmental monitoring and vehicle resource management. Huang et al. (2018) developed a system that monitors environmental conditions inside vehicles, including temperature, humidity, and air quality, to improve passenger comfort. Additionally, Liu et al. (2019) investigated IoT-based fuel monitoring systems that track fuel levels and optimize fuel consumption. These systems help drivers manage fuel usage efficiently and prevent unexpected fuel shortages.

Conclusion of Literature Survey

Overall, the literature highlights the significant potential of IoT-based intelligent vehicle systems in enhancing vehicle safety, security, and operational efficiency. By integrating advanced sensors, real-time data processing techniques, and automated alert mechanisms, these systems provide effective solutions to many challenges associated with road safety. However, further research is required to improve system accuracy, optimize communication technologies, and evaluate the long-term performance of these intelligent solutions in real-world environments.

3

SYSTEM ANALYSIS

3. SYSTEM ANALYSIS

3.1 Software development lifecycle

There are various software development approaches defined and designed which are used/employed during development process of software, these approaches are also referred as "Software Development Process Models". Each process model follows a particular life cycle in order to ensure success in process of software development. Fig 3.1 Software Development Life Cycle

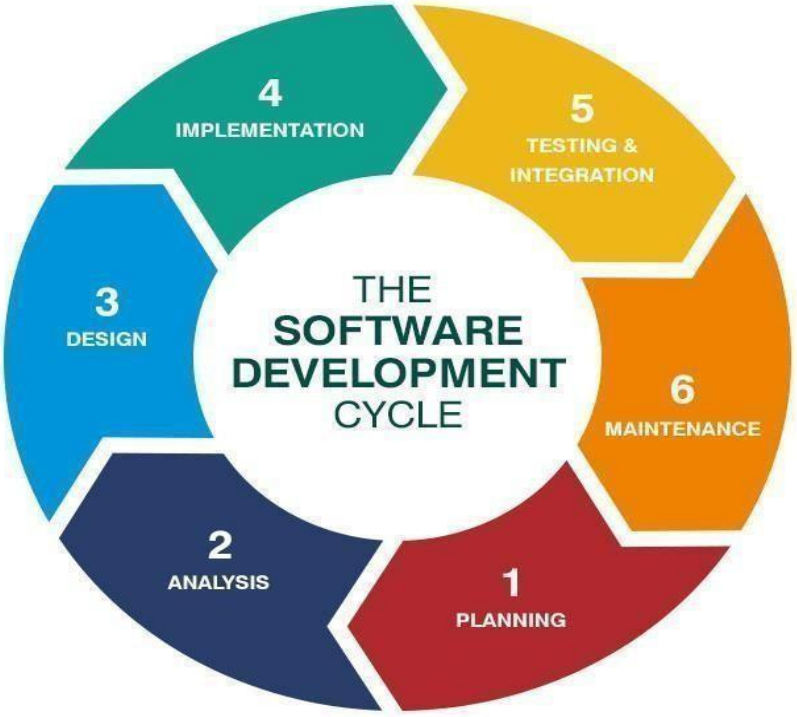

Fig 3.1 Software development lifecycle

3.2 Overview of IoT Technology

Internet of Things (IoT) technology has emerged as a transformative force, revolutionizing the way we interact with the world around us. At its core, IoT refers to the interconnection of everyday devices, objects, and systems through the internet, enabling them to collect, exchange, and act upon data. This interconnected ecosystem spans a multitude of industries, from healthcare and agriculture to smart cities and industrial automation.

Key to IoT is the deployment of sensors and actuators embedded in physical objects, ranging from household appliances to industrial machinery. These sensors gather real-time data, creating a wealth of information that can be harnessed for insights and decision-making. The data is then transmitted to cloud-based platforms, where it is processed, analyzed, and made accessible for end-users and

applications.

Connectivity lies at the heart of IoT, and various communication protocols facilitate seamless interaction between devices. Common protocols include Wi-Fi, Bluetooth, Zigbee, and cellular networks. These communication channels enable devices to transmit and receive data, forming a network that transcends geographical boundaries.

Security is a paramount concern in the IoT landscape. With the proliferation of connected devices, ensuring the confidentiality and integrity of data becomes crucial. Encryption, secure authentication mechanisms, and regular software updates are essential components of a robust IoT security framework.

IoT applications are diverse and continually expanding. In healthcare, IoT devices monitor patient vitals and enable remote health tracking. Smart homes leverage IoT for automated lighting, climate control, and security systems. Agriculture benefits from IoT-enabled precision farming, optimizing resource usage based on real-time environmental data. Industrial IoT (IIoT) enhances manufacturing processes through predictive maintenance and efficient resource utilization.

The concept of smart cities integrates IoT to enhance urban living. Intelligent traffic management, waste disposal, and energy efficiency are facilitated by IoT technologies. Additionally, IoT plays a pivotal role in environmental monitoring, helping track climate changes, pollution levels, and wildlife conservation efforts.

Challenges persist in the IoT landscape, including interoperability issues, standardization concerns, and privacy considerations. As the IoT ecosystem continues to evolve, addressing these challenges becomes imperative for sustained growth and innovation.

IoT technology represents a paradigm shift in the way we perceive and interact with our surroundings. By interconnecting devices, collecting data, and leveraging advanced analytics, IoT fosters efficiency, convenience, and innovation across various domains, shaping a future where the physical and digital worlds converge for the betterment of society.

3.3 Features of IoT

key features of IoT along with detailed explanations:

1. Connectivity
2. Sensors and Actuators
3. Data Collection and Analysis
4. Remote Monitoring and Control
5. Interoperability
6. Security
7. Scalability
8. Energy Efficiency
9. Edge Computing
10. User Interface

3.4 Functions of IoT

The functions of IoT (Internet of Things) are diverse and play a crucial role in transforming various industries and aspects of daily life. Here is a detailed overview of the key functions of IoT:

1. Data Collection
2. Data Processing and Analysis
3. Remote Monitoring
4. Automation and Control
5. Predictive Maintenance
6. Asset Tracking and Management
7. Energy Efficiency
8. Healthcare Monitoring
9. Smart Agriculture
10. Environmental Monitoring
11. Supply Chain Optimization
12. Smart Cities
13. Security and Surveillance
14. Consumer Applications

3.5 Applications of IoT

Here is a list of IoT applications:

1. Smart Home Automation
2. Healthcare Monitoring
3. Industrial IoT (IIoT)
4. Smart Cities
5. Agricultural IoT (AgriTech)
6. Retail and Supply Chain Management
7. Energy Management
8. Environmental Monitoring
9. Connected Vehicles
10. Smart Wearables
11. Logistics and Fleet Management
12. Building Automation
13. Water Management
14. Smart Grids
15. Home Healthcare
16. Industrial Safety
17. Smart Appliances

3.6 IoT Layered Architecture

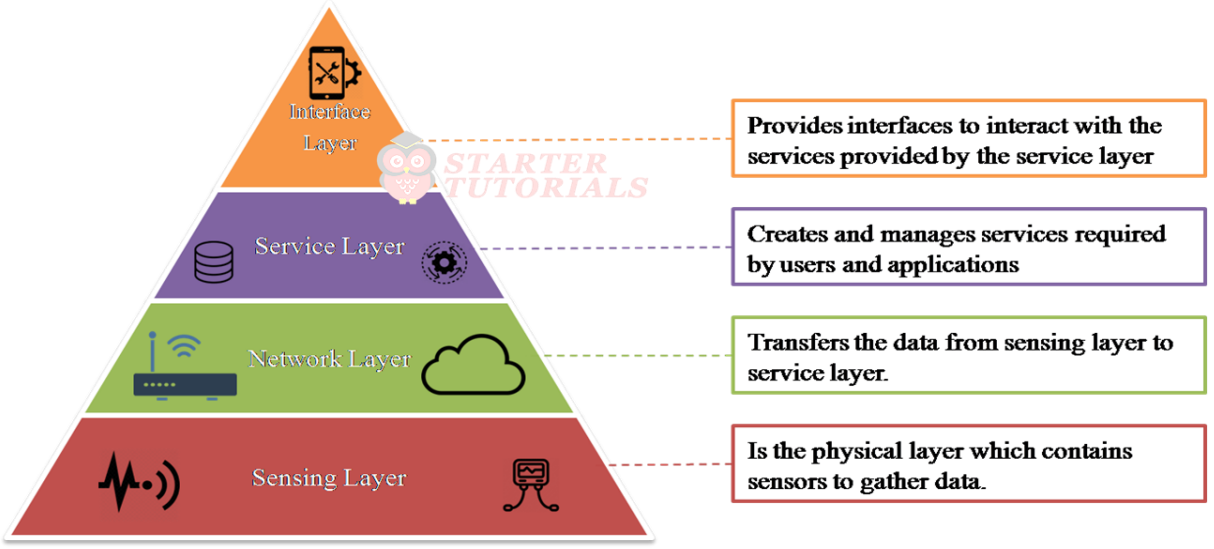

Fig 3.6 IoT Layered Architecture

The Internet of Things (IoT) architecture is typically organized into multiple layers to efficiently manage and process the vast amount of data generated by connected devices. These layers, namely the Interface Layer, Service Layer, Network Layer, and Sensing Layer, work together to enable seamless communication, data processing, and interaction within the IoT ecosystem.

Sensing Layer:

At the bottom of the IoT architecture is the Sensing Layer, which is also referred to as the Perception Layer. This layer involves the physical devices or sensors that collect data from the environment. These sensors can range from simple temperature and humidity sensors to more complex devices like cameras, accelerometers, and GPS modules. The primary function of the Sensing Layer is to capture real-world information and convert it into digital data for further processing.

Network Layer:

The Network Layer is responsible for establishing the communication infrastructure between the various devices in the IoT system. This layer deals with issues related to data transmission, connectivity, and protocols. It ensures that data can be efficiently and securely transferred between devices, often using wireless communication technologies such as Wi-Fi, Bluetooth, Zigbee, or cellular networks. Additionally, the Network Layer may involve edge computing, where someprocessing occurs closer to the data source to reduce latency and bandwidth usage.

Service Layer:

Sitting above the Network Layer is the Service Layer, also known as the Middleware Layer. This layer plays a crucial role in managing communication between devices and handling the processing of data. It includes services such as data storage, analytics, security, and device management. The Service Layer acts as the intermediary between the lower layers (Sensing and Network) and the higher layers (Interface and Application) by providing a set of APIs and protocols that enable seamless integration and interaction.

Interface Layer:

The Interface Layer is the topmost layer of the IoT architecture, focusing on the user interface and interaction with the system. This layer enables users to monitor, control, and make decisions based on the data collected by the sensors and processed by the lower layers. Interfaces can take various forms, including web applications, mobile apps, and other graphical user interfaces (GUIs). The Interface

Layer ensures that end-users can easily access and utilize the information provided by the IoT system.

In summary, the layered architecture of IoT, consisting of the Sensing, Network, Service, and Interface Layers, creates a structured framework for building scalable, efficient, and secure IoT systems. Each layer plays a distinct role in the overall functionality of the system, from collecting raw data at the bottom to presenting meaningful insights and enabling user interaction at the top.

3.7 Existing Methods

- Challenges in the Automotive Industry
- Inadequate Vehicle Tracking
- Insufficient Fatigue Detection

3.7.1 Challenges in the Automotive Industry

The automotive industry, despite remarkable advancements, grapples with substantial safety and security challenges. One glaring gap is the absence of built-in alcohol detection systems within vehicles. The reliance on drivers to self-monitor their alcohol consumption poses a significant risk to road safety. An innovative solution integrating alcohol detection technology directly into vehicles is imperative to mitigate the dangers associated with impaired driving, ultimately enhancing overall safety on the roads.

3.7.2 Inadequate Vehicle Tracking

Another noteworthy challenge is the limited capabilities of vehicle tracking systems. The current infrastructure relies heavily on manual reporting of accidents, a process that is not only time-consuming but also prone to inaccuracies. This deficiency in real-time monitoring can impede emergency response times, leading to potentially more severe consequences. An advancement in vehicle tracking technologies is essential to provide authorities with immediate and accurate information, ensuring a prompt and effective response to accidents.

3.7.3 Insufficient Fatigue Detection

The automotive industry also falls short in adequately addressing the issue of driver fatigue. The existing methods for detecting driver drowsiness are rudimentary, often relying on basic alert systems. These systems may not be sensitive enough to identify subtle signs of fatigue, exposing drivers to the risk of accidents due to impaired reaction times. An enhanced fatigue detection mechanism, possibly

utilizing advanced sensors and artificial intelligence, is critical to addressing this safety concern and preventing accidents caused by drowsy driving.

The automotive industry faces pivotal safety challenges due to the absence of built-in alcohol detection, limited vehicle tracking capabilities, and insufficient fatigue detection mechanisms. Addressing these shortcomings through innovative technologies and integrated safety features is crucial for advancing road safety standards and reducing the incidence of accidents on our roads.

3.8 Proposed Methods

- Accident Alert
- Alcohol Detection
- Driver Fatigue Detection
- Seat Belt Alert
- Vehicle Environment Monitoring
- Fuel Level Monitoring

3.8.1 Accident Alert

Creating a robust Accident Alert System is imperative for enhancing response times and ensuring rapid assistance during unforeseen vehicular incidents. This system incorporates a Vibration Sensor and a GSM Module, offering a sophisticated solution to detect accidents promptly and communicate critical information in real-time.

The Vibration Sensor serves as the frontline defense, strategically positioned within the vehicle to detect sudden and intense vibrations indicative of collisions or accidents. Its heightened sensitivity enables it to capture even the slightest impacts, ensuring a swift response to varying magnitudes of accidents.

Upon detection of a significant impact, the Vibration Sensor triggers the Accident Alert System into action. The system, seamlessly integrated with a GSM Module, initiates immediate communication protocols. The GSM Module, leveraging the extensive coverage of mobile networks, serves as the conduit for transmitting alert messages containing crucial details about the accident.

This real-time communication is a game-changer in emergency response. The alert messages include essential information such as the vehicle's identification details, precise GPS coordinates, and a timestamp, providing emergency services with a comprehensive overview of the situation. This

detailed data significantly expedites their ability to reach the accident site swiftly and deploy assistance promptly.

Beyond notifying emergency services, the system can be configured to alert pre-defined contacts, such as family members or friends. This additional layer of communication ensures that individuals close to the driver are promptly informed, fostering a network of support during critical times.

In essence, the Accident Alert System with Vibration Sensor and GSM Module acts as a proactive safety mechanism. By harnessing the sensitivity of the Vibration Sensor and the rapid communication capabilities of the GSM Module, the system contributes to minimizing response times and maximizing the efficiency of emergency services. This integrated approach not only provides immediate assistance to those involved in accidents but also plays a pivotal role in overall road safety.

3.8.2 Alcohol Detection

Ensuring road safety in the face of alcohol-impaired driving demands innovative solutions. An effective approach involves the integration of an MQ-3 sensor and a GSM module, creating a robust Alcohol Detection System that not only identifies potential risks but also takes proactive measures to prevent accidents.

The MQ-3 sensor serves as the system's sensory component, capitalizing on its sensitivity to alcohol vapors. Positioned strategically within the vehicle's interior, the MQ-3 sensor continuously samples the air, particularly the breath exhaled by the driver. As the driver breathes out, any alcohol vapors present in the breath are captured by the sensor. The MQ-3 sensor operates on the principle of altering its electrical conductivity in response to the concentration of alcohol, providing a reliable measure of the level of impairment.

When the MQ-3 sensor detects alcohol levels beyond a predefined threshold, the GSM module is triggered into action. The GSM module serves as the communication hub of the system, enabling real-time interaction. It initiates a sequence of actions designed to address the detected impairment promptly.

Upon identifying elevated alcohol levels, the system activates the GSM module to send an alert message via SMS. This message typically includes crucial information such as the vehicle's

identification details and the specific alcohol concentration detected. By leveraging GSM technology, this alert is swiftly transmitted to predefined emergency contacts or relevant authorities, facilitating immediate intervention.

Crucially, the Alcohol Detection System goes beyond mere notification. It incorporates a preventive measure by interfacing with the vehicle's ignition system. If the MQ-3 sensor indicates an alcohol concentration exceeding the safety threshold, the GSM module communicates with the vehicle's engine control unit (ECU). This communication prevents the engine from starting, effectively inhibiting the impaired individual from driving the vehicle.

the Alcohol Detection System seamlessly combines the precision of the MQ-3 sensor with the communication capabilities of the GSM module. This integration not only identifies instances of alcohol-impaired driving but also takes proactive steps to prevent potential accidents. By alerting authorities and implementing an engine ignition lock, the system acts as a decisive deterrent against the hazards associated with drunk driving, contributing significantly to enhanced road safety.

3.8.3 Real-time Vehicle Tracking

The integration of a GPS module for tracking and the ThingSpeak platform for cloud communication offersa powerful solution for real-time vehicle tracking. This system enables seamless monitoring and communication, enhancing both efficiency and safety in various applications.

The GPS module serves as the core tracking component, providing accurate and real-time location data for the vehicle. Strategically installed within the vehicle, the GPS module continually collects spatial information, including latitude, longitude, and altitude. This data is then transmitted to a central server for processing and storage.

The ThingSpeak platform, a cloud communication service, is leveraged to manage the communication aspect of the real-time tracking system. As the GPS module collects and updates the vehicle's location, ThingSpeak processes this information and facilitates communication between the vehicle and the cloud. ThingSpeak versatility allows for the seamless integration of messaging services, enabling the real-time transmission of location data to a designated cloud platform.

This integrated approach ensures that the vehicle's location is consistently updated on the cloud server,

offering a dynamic and accurate representation of its movement. The ThingSpeak platform facilitates the communication link between the vehicle and the cloud, enabling not only real-time tracking but also providing a foundation for further data analysis and insights.

This real-time vehicle tracking system proves invaluable in various scenarios, from logistics and fleet management to personal vehicle monitoring. Fleet managers can optimize routes, monitor driver behavior, and enhance overall operational efficiency. In the event of an emergency or unauthorized use, the system allows for swift response by providing accurate, real-time location information.

In conclusion, the combination of a GPS module for accurate tracking and the ThingSpeak platform for cloud communication results in a robust real-time vehicle tracking system. This integrated solution not only ensures precise location updates but also establishes a foundation for comprehensive data analysis and communication, contributing significantly to improved vehicle management, safety, and overall operational efficiency.

3.8.4 Driver Fatigue Detection

The implementation of a Driver Fatigue Detection, integrating a Blink sensor for monitoring driver drowsiness and buzzers for alarms, addresses a critical aspect of road safety. This system is designed to prevent accidents caused by driver fatigue by providing timely alerts and encouraging immediate corrective actions.

The Blink sensor, a key component of the system, is strategically placed to monitor the driver's eye movements. It operates on the principle that prolonged eye closure is indicative of drowsiness or fatigue. The sensor continuously monitors the driver's blink patterns, detecting when the eyes remain closed for an extended duration.

Upon detecting prolonged eye closure, the Blink sensor triggers the Driver Fatigue Detection into action. The system responds by activating a buzzer alarm within the vehicle. The audible alert is designed to immediately capture the driver's attention, serving as a proactive measure to prevent potential accidents caused by drowsy driving.

This integrated solution is particularly crucial for long-distance or monotonous driving scenarios where

driver fatigue is more likely to occur. The real-time monitoring provided by the Blink sensor ensures that the system responds promptly to any signs of drowsiness, providing the driver with a timely alert to take corrective actions, such as pulling over for rest.

In essence, the Driver Fatigue Detection with Blink sensor and buzzer serves as a vigilant co-pilot, continuously monitoring the driver's alertness and intervening when signs of fatigue are detected. This proactive approach contributes significantly to road safety by mitigating the risks associated with drowsy driving and promoting a heightened level of driver awareness during extended journeys.

3.8.5 Seat Belt Alert

The implementation of a Seat Belt Alert System, incorporating a touch pin sensor for detecting passenger presence and buzzers for alarms, addresses a fundamental aspect of automotive safety. This system is designed to promote seat belt usage among drivers and passengers, thereby reducing the likelihood of injuries in the event of a collision.

A critical component of the system, the touch pin sensor is strategically positioned within the vehicle's seating area to detect passenger presence. Utilizing capacitive technology, the sensor identifies when a conductive object, such as a human body, comes into contact with it. By accurately sensing passenger occupancy, the touch pin sensor forms the foundation of the seat belt alert system.

The buzzer serves as the audible alert mechanism within the system. When triggered by the touch pin sensor, the buzzer emits a distinct sound to remind occupants to fasten their seat belts. This audible cue provides a clear and immediate indication of non-compliance, encouraging passengers to take proactive safety measures.

System Operation:
Upon detecting the presence of a passenger through the touch pin sensor, the seat belt alert system initiates a check to determine whether the corresponding seat belt is fastened. If the seat belt is not secured, the system activates the buzzer, generating an audible alert to prompt the occupant to buckle up. Once the seat belt is fastened, the system resets, ready to detect the next passenger.

Implementing the seat belt alert system involves several steps. Firstly, the touch pin sensors are

strategically placed within the vehicle's seating area, ensuring comprehensive coverage to detect passenger occupancy accurately. Next, the sensors are interfaced with a microcontroller or single-board computer capable of processing input signals. The microcontroller then controls the operation of the buzzer based on the input received from the touch pin sensors. Finally, the buzzer is connected to the microcontroller, completing the circuitry necessary for the alert system.

3.8.6 Face Recognition for Secure Vehicle Access

Face recognition technology plays an important role in enhancing vehicle security by ensuring that only authorized users can access and operate the vehicle. In the proposed intelligent vehicle system, a Python-based face recognition module is implemented to verify the identity of the driver before allowing the vehicle to start. This biometric authentication mechanism helps prevent unauthorized vehicle usage and reduces the risk of vehicle theft.

The system uses a camera module installed inside the vehicle to capture the image of the person attempting to start the vehicle. When the driver sits in the vehicle, the camera captures a real-time image and sends it to the processing system. The captured image is then analyzed using computer vision techniques in Python, which compare the detected face with the images stored in the authorized database.

The face recognition process is performed using image processing libraries such as OpenCV and machine learning-based face detection algorithms. First, the system detects the face in the captured image using a face detection model. Once the face is detected, unique facial features are extracted and compared with the stored facial data of authorized users. If the system finds a match, the driver is authenticated successfully and the vehicle ignition system is enabled.

If the captured face does not match any of the stored authorized faces, the system denies access and prevents the vehicle from starting. In such cases, the system may also trigger an alert or display a warning message indicating that the driver is unauthorized. This ensures that only registered users can operate the vehicle, thereby improving overall vehicle security.

One of the major advantages of using face recognition is that it provides contactless and convenient authentication. Unlike traditional key-based or password-based systems, biometric authentication cannot be easily duplicated or stolen. The system also eliminates the need for physical keys, making vehicle access more secure and user-friendly.

In conclusion, the integration of Python-based face recognition technology significantly improves the security of the intelligent vehicle system. By verifying the driver's identity before allowing vehicle operation, the system prevents unauthorized access and enhances protection against vehicle theft. This advanced authentication mechanism contributes to the development of safer and smarter vehicle security systems.

3.9 Features of this project

The Intelligent Vehicle System is a comprehensive solution designed to elevate the standards of vehicle safety and monitoring through the integration of cutting-edge technologies. With a focus on sensor integration, safety enhancement, advanced techniques, real-world evaluation, real-time vehicle tracking, and cost-effectiveness coupled with user-friendliness, this system is poised to revolutionize the driving experience.

Sensor Integration:

At the heart of the Intelligent Vehicle System lies an intricate sensor integration framework. Various sensors, including but not limited to vibration sensors, MQ-3 alcohol sensors, Blink sensors for monitoring driver fatigue, and GPS modules, work synergistically to gather real-time data. This multifaceted sensor integration forms the backbone of the system, enabling a holistic approach to vehicle safety and performance monitoring.

Safety Enhancement:

The paramount objective of the Intelligent Vehicle System is to enhance safety on the roads. The safety enhancement feature includes real-time accident detection through vibration sensors, alcohol detection using MQ-3 sensors, and driver sleep alerts triggered by Blink sensors. These features collectively contribute to accident prevention, rapid response to emergencies, and proactive measures against impaired or fatigued driving.

Advanced Techniques:

Employing advanced techniques such as machine learning algorithms, the Intelligent Vehicle System goes beyond traditional approaches. Machine learning enhances the system's ability to analyze and predict driver behavior, providing a more intelligent and adaptive approach to safety. These advanced techniques contribute to a smarter and more responsive driving environment.

Real-world Evaluation:

The system undergoes rigorous real-world evaluation to ensure its effectiveness in diverse driving conditions. Real-world testing, simulation, and data analysis play a crucial role in fine-tuning the

system's algorithms and responsiveness. This commitment to real-world evaluation ensures that the Intelligent Vehicle System is robust and reliable in practical driving scenarios.

Real-time Vehicle Tracking:

Real-time vehicle tracking is achieved through the integration of GPS modules and GSM communication platforms. This feature not only provides live location updates but also facilitates data analysis for improved monitoring and insights. Real-time vehicle tracking enhances overall safety and allows for prompt response in case of emergencies.

Cost-effective & User Friendly:

A defining characteristic of the Intelligent Vehicle System is its commitment to being cost-effective and user-friendly. Leveraging state-of-the-art technology does not come at the expense of affordability or user accessibility. The system is designed with user-friendly interfaces, ensuring that cutting-edge safety features are accessible to a wide range of drivers and vehicle owners without compromising cost-effectiveness.

the Intelligent Vehicle System is a multifunctional and user-centric solution, seamlessly integrating sensor technologies, advanced safety features, and real-time tracking capabilities. The commitment to real-world evaluation ensures its practical efficacy, while the emphasis on cost- effectiveness and user-friendliness makes it an inclusive and accessible advancement in vehicle safety.

4

SYSTEM REQUIREMENT SPECIFICATIONS

4 SYSTEM REQUIREMENT SPECIFICATIONS

4.1 Hardware Requirements

4.1.1 ESP32 Microcontroller

The ESP32 Microcontroller is the brain of the Intelligent Vehicle System, responsible for processing data from various sensors and modules. Its versatility, low power consumption, and built-in Wi-Fi and Bluetooth capabilities make it an ideal choice for managing the system's hardware components.

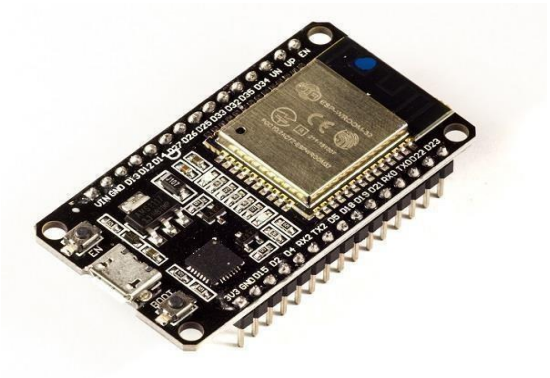

Fig 4.1.1 ESP32 Microcontroller

Technical Specifications of ESP32:

1. Integrated Crystal− 40 MHz
2. Module Interfaces− UART, SPI, I2C, PWM, ADC, DAC, GPIO, pulse counter, capacitive touch sensor
3. Integrated SPI flash− 4 MB
4. ROM− 448 KB (for booting and core functions)
5. SRAM− 520 KB
6. Integrated Connectivity Protocols− WiFi, Bluetooth, BLE
7. On−chip sensor− Hall sensor
8. Operating temperature range− −40 − 85 degrees Celsius
9. Operating Voltage− 3.3V
10. Operating Current− 80 mA (average)

4.1.2 GSM Module

The GSM Module facilitates communication between the vehicle and external platforms, such as sending SMS alerts in case of emergencies. Its integration ensures real-time communication, crucial for features like accident alerts and alcohol detection.

A GSM (Global System for Mobile Communications) module is a compact electronic device that facilitates mobile communication in various applications. It enables communication between devices or systems through the GSM network, making it a fundamental component for functionalities like sending SMS alerts, making calls, and transmitting data wirelessly. In the context of the Intelligent Vehicle System, a GSM module is crucial for real-time communication and emergency notifications.

Technical Specifications of GSM Module:

1. Frequency Bands
2. Data Transfer Rates
3. SIM Interface
4. Power Supply
5. Operating Temperature Range
6. Dimensions
7. Output Power

Fig 4.1.2 GSM Module

4.1.3 GPS Module

The GPS Module provides accurate location data, enabling real-time vehicle tracking. This information is pivotal for emergency response, route optimization, and overall monitoring. A GPS (Global Positioning System) module is a compact electronic device that receives signals fromsatellites to determine the device's precise location, speed, direction, and time. In the context of the Intelligent Vehicle System, a GPS module is crucial for real-time vehicle tracking, route optimization, and providing accurate location data.

Technical Specifications of GPS Module:

1. Number of Channels
2. Accuracy
3. Update Rate
4. Communication Interface
5. Sensitivity
6. Operating Temperature Range
7. Power Supply Voltage
8. Time to First Fix (TTFF)
9. Data Output Format

Fig 4.1.3 GPS Module

4.1.4 Vibration Sensor

The Vibration Sensor is essential for accident detection. Its ability to sense sudden changes in vehicle movement allows the system to identify and respond promptly to collisions or accidents. A vibration sensor, also known as a vibration detector or accelerometer, is an electronic device designed to measure and quantify vibrations or oscillations in an object or a surface. These sensors detect changes in acceleration, providing information about the movement, impact, or vibrations

experienced by the object to which they are attached. Vibration sensors are commonly used in various applications, including structural health monitoring, machinery condition monitoring, and automotive safety systems, where the detection of sudden movements or vibrations is crucial for assessing the integrity and performance of the monitored systems.

Technical Specifications of Vibration Sensor:

1. Sensitivity
2. Frequency Range
3. Operating Voltage
4. Operating Current
5. Output Type (Analog/Digital)
6. Response Time
7. Dimensions
8. Mounting Options
9. Operating Temperature Range
10. Output Signal Amplitude

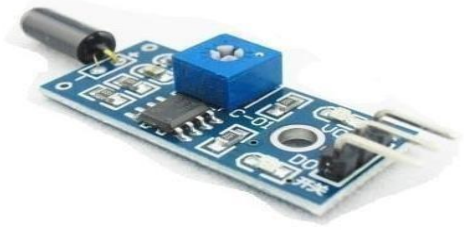

Fig 4.1.4 Vibration Sensor

4.1.5 Eyeblink Sensor

The Eyeblink Sensor contributes to the driver sleep alert feature by monitoring the driver's eye movements. This sensor detects prolonged eye closure, indicating potential drowsiness or fatigue.An eye blink sensor, also known as a blink detector, is a device that is designed to detect and monitor the blinking of a person's eyes. These sensors typically use infrared light or electrodes to detect changes in the electrical signals or reflectivity caused by the movement of the eyelids during blinking.

Eye blink sensors are often used in various applications, including human-computer interaction, driver drowsiness detection systems, and assistive technologies. In the context of driver safety, for example,

an eye blink sensor can be employed to monitor the driver's level of alertness by detecting the duration and frequency of eye blinks. If the system detects signs of drowsiness, it can trigger alerts or alarms to prompt the driver to stay focused on the road or take a break.

Technical Specifications of Eye Blink Sensor:

1. Detection Method: Infrared or Electrodes
2. Output Type: Analog/Digital
3. Sensitivity Adjustment Range
4. Response Time
5. Operating Voltage
6. Operating Current
7. Dimensions
8. Weight
9. Compatibility with Eye Movement Patterns
10. Communication Interface (if applicable)

Fig 4.1.5 Eye Blink Sensor

4.1.6 MQ-3 Sensor

The MQ3 Sensor is dedicated to alcohol detection. It senses alcohol vapors in the vehicle, providing an additional layer of safety by preventing the engine from starting in case of alcohol consumption.

The MQ-3 sensor is a type of gas sensor specifically designed to detect the presence of various gases in the air. It belongs to a series of gas sensors manufactured by Haney Electronics. The MQ-3 sensor is

particularly sensitive to alcohol vapor and is commonly used for detecting the concentration of alcohol in the surrounding environment.

These sensors operate on the principle of resistance changes. The presence of a specific gas leads to a change in the electrical resistance of the sensor, and this change is then measured and converted into a readable output. In the case of the MQ-3 sensor, it is calibrated to be most responsive to alcohol, making it suitable for applications where detecting alcohol levels is important, such as in breathalyzer devices or alcohol detection systems for safety and security.

The MQ-3 sensor is widely used in various projects related to gas detection, air quality monitoring, and safety applications where the presence of alcohol vapor needs to be identified.

Technical Specifications of MQ-3 Sensor:

1. Gas Detected
2. Sensitivity Adjustment
3. Operating Voltage
4. Heating Element
5. Warm-up Time
6. Output Signal
7. Detection Range
8. Operating Temperature Range
9. Mounting Options

Fig 4.1.6 MQ3 Sensor

4.1.7 Servo Motor

The Servo Motor is a compact and precise motor used for controlling angular or linear position. It is widely used in embedded systems and robotics for applications where accurate movement and positioning are required.In this project, the servo motor is used to control mechanical movements such as opening and closing of a lock or gate based on authentication or sensor inputs, enhancing automation and security.

A servo motor consists of a DC motor, a gear mechanism, a position sensor (usually a potentiometer), and a control circuit. It operates based on Pulse Width Modulation (PWM) signals. By varying the width of the pulse, the servo motor rotates to a specific angle, typically between 0° to 180°.

When a control signal is sent from a microcontroller like Arduino or ESP32, the servo motor adjusts its shaft position accordingly. This makes it highly suitable for precise control tasks in IoT and automation projects.Servo motors are known for their high accuracy, quick response, and stable performance, making them essential components in robotics, automation systems, and smart devices.

Technical Specifications of Servo Motor:

1. Operating Voltage – Typically 4.8V to 6V
2. Control Signal – PWM (Pulse Width Modulation)
3. Rotation Angle – Usually 0° to 180°
4. Torque – Varies (e.g., 1.8 kg/cm to 10 kg/cm depending on model)
5. Speed – Around 0.1s to 0.2s per 60° rotation
6. Gear Type – Plastic or Metal gears
7. Control Interface – 3-wire (VCC, GND, Signal)
8. Weight – Lightweight (approx. 9g for SG90)
9. Operating Temperature Range – 0°C to 55°C

Fig 4.1.7 Servo Motor

4.2 Software Requirements

4.2.1 Arduino IDE

Arduino IDE is the programming environment used to code and upload firmware to the ESP32 Microcontroller. Its user-friendly interface simplifies the development process, making it accessible for both beginners and experienced developers.

Arduino IDE, or Arduino Integrated Development Environment, is an open-source software platform used for writing, compiling, and uploading code to Arduino-compatible microcontrollers. It provides a user-friendly interface for programming Arduino boards and is a crucial tool for electronics enthusiasts, hobbyists, and professionals working on projects that involve Arduino hardware.

The Arduino IDE simplifies the process of creating and uploading code to Arduino boards, making it accessible to individuals with various levels of programming experience. It includes a code editor with features such as syntax highlighting, auto-completion, and error checking, making it easier for users to write and debug their programs.

Arduino IDE Functionalities:

1. Code Editing
2. Compilation
3. Upload
4. Serial Monitor
5. Library Management
6. Sketch Management
7. Board Manager
8. Debugging Tool

4.2.2 MQTT

MQTT (Message Queuing Telemetry Transport) is a lightweight messaging protocol designed for efficient communication between IoT devices. It is widely used in IoT applications due to its low bandwidth usage, minimal power consumption, and ability to work reliably over unstable networks.

MQTT follows a publish-subscribe communication model, where devices (clients) do not communicate directly with each other. Instead, they send (publish) messages to a central server called a broker, and other devices receive (subscribe to) those messages based on specific topics.

MQTT (Message Queuing Telemetry Transport) is a lightweight and efficient messaging protocol specifically designed for communication in Internet of Things (IoT) systems. It is widely adopted due to its low bandwidth consumption, minimal power usage, and ability to operate reliably even

in unstable or low-speed network conditions. MQTT follows a publish-subscribe architecture, where devices, known as clients, do not communicate directly with each other. Instead, they exchange messages through a central server called a broker. Clients can publish data to specific topics, and other clients can subscribe to those topics to receive the data. This decoupled communication model improves scalability, flexibility, and efficiency in IoT networks.

In MQTT, the broker plays a crucial role by managing all message distribution between connected devices. It receives messages from publishers and forwards them to the appropriate subscribers based on topic matching. MQTT supports different Quality of Service (QoS) levels, which define the reliability of message delivery. These levels include at most once (QoS 0), at least once (QoS 1), and exactly once (QoS 2), allowing developers to choose the required level of reliability based on application needs. Additionally, MQTT supports features such as retained messages, last will messages, and persistent sessions, which enhance communication reliability and ensure proper system behavior even during unexpected disconnections.

In this project, MQTT is used to enable seamless communication between the ESP32 microcontroller, connected sensors, and cloud platforms. The ESP32 acts as a client that collects sensor data such as heart rate, temperature, activity, and stress levels, and publishes this information to the MQTT broker under specific topics. The cloud server or user interface subscribes to these topics to receive real-time data updates. This enables efficient remote monitoring, data visualization, and control of the system from anywhere. MQTT ensures fast, reliable, and scalable communication, making it highly suitable for real-time health monitoring applications.

Overall, MQTT plays a vital role in IoT systems by providing a simple, efficient, and reliable communication mechanism. Its lightweight design, flexible architecture, and support for real-time data exchange make it an ideal choice for applications that require continuous monitoring and remote access. By integrating MQTT into the system, the project achieves improved connectivity, reduced network overhead, and enhanced performance in transmitting health-related data.

5

SOFTWARE ENVIRONMENT

5 SOFTWARE ENVIRONMENT

5.1 Arduino Programming

Arduino programming provides a versatile platform for both beginners and experienced developers to create interactive projects and prototypes. At its core, Arduino employs the C/C++ programming language, making it accessible to a wide range of users. Understanding the basics of Arduino programming involves familiarity with key concepts, syntax, and the Arduino Integrated Development Environment (IDE).

In Arduino programming, a program is referred to as a "sketch." Each sketch consists of two mandatory functions: `setup()` and `loop()`. The `setup()` function runs once at the beginning of the program and is used for initializing variables, pin modes, and other setup tasks. The `loop()` function, as the name suggests, runs continuously, executing the main logic of the program.

Arduino programming heavily relies on functions to organize code. Users can create custom functions to modularize their code, promoting readability and reusability. Parameters can be passed to functions, allowing for flexibility in function execution.

Arduino sketches interact with the physical world through input and output operations. Reading sensor values, button states, or other input data is done through various functions, while output operations involve controlling LEDs, motors, and other actuators. The `digitalRead()`, `digitalWrite()`, `analogRead()`, and `analogWrite()` functions are fundamental for input and output tasks.

Control structures, such as `if`, `else`, `for`, and `while` statements, enable conditional execution and loop control in Arduino programming. These structures are crucial for implementing decision-making processes and repetitive tasks.

Variables in Arduino are used to store and manipulate data. Understanding data types (integers, floats, characters) and their limitations is essential for efficient memory usage. Constants can be declared using the `const` keyword, ensuring that values remain unchanged during program execution.

Arduino's built-in libraries extend functionality by providing pre-written code for specific tasks. These libraries simplify complex operations, ranging from communication protocols (e.g., Serial

communication) to sensor interfacing (e.g., the Servo library for controlling servo motors). Debugging in Arduino involves using the Serial Monitor, a tool integrated into the Arduino IDE. Developers can print variable values or debug messages to the Serial Monitor, aiding in identifying and resolving issues in the code.

Arduino programming empowers enthusiasts and professionals alike to bring their electronic projects to life. By mastering the basics of Arduino's syntax, functions, control structures, variables, and libraries, users can unlock the full potential of this open-source hardware platform, fostering creativity and innovation in the realm of electronics and automation.

5.2 Functionalities of Arduino programming

Here's a list of key functionalities in Arduino programming:

- *setup() and loop() Functions:*

setup() initializes variables and sets up the initial conditions when the program starts.
loop() runs continuously, executing the main logic of the program.

- *Functions:*

Custom functions can be created to modularize and organize code.
Functions can accept parameters for flexibility and reusability.

- *Input and Output Operations:*

digitalRead(): Reads the state of a digital pin (HIGH or LOW).
digitalWrite(): Writes a digital value to a pin (HIGH or LOW).
analogRead(): Reads the analog value from an analog pin.
analogWrite(): Writes a PWM value to a PWM-enabled pin.

- *Control Structures:*

if`, else: Conditional statements for decision-making.
for, while: Looping structures for repetitive tasks.

- *Variables:*

Declaration and use of variables to store and manipulate data.

Data types include integers (`int`), floats (`float`), and characters (`char`).

- *Constants:*

Declaration of constants using the `const` keyword to define values that remain unchanged during program execution.

- *Libraries:*

Use of built-in libraries for specific tasks.

Examples include the Serial library for communication and Servo library for controlling servo motors.

- *Serial Communication:*

Utilization of Serial communication for debugging and data exchange with the computer.
Functions like `Serial.begin()`, `Serial.print()`, and `Serial.read()` are commonly used.

- *Interrupts:*

Handling external events through interrupt service routines.

Functions like `attachInterrupt()` and `detachInterrupt()` enable interrupt handling.

- *Timers and Delays:*

Use of timers for precise timing intervals.

Functions like `millis()` and `delay()` are employed for time-related tasks.

- *Arrays:*

Declaration and manipulation of arrays to store multiple values of the same data type.

- *Bitwise Operations:*

Bitwise manipulation for advanced tasks like setting, clearing, or testing specific bits in a variable.

- *EEPROM:*

Accessing and using the Electrically Erasable Programmable Read-Only Memory (EEPROM) for data storage between power cycles.

- *Wire Library (I2C):*

Communication with I2C devices using the Wire library for sensors, displays, and other peripherals.

- *Advanced Math:*

Mathematical operations using functions like `pow()`, `sqrt()`, `sin()`, `cos()`, and `tan()`.

6

SYSTEM DESIGN

6 SYSTEM DESIGN

6.1 Circuit Diagrams

6.1.1 Circuit Diagram

A The circuit diagram of your project consists of an ESP32 microcontroller interfaced with multiple sensors and output devices to implement a Smart Vehicle Access and Safety System with Alcohol Detection and Automation.

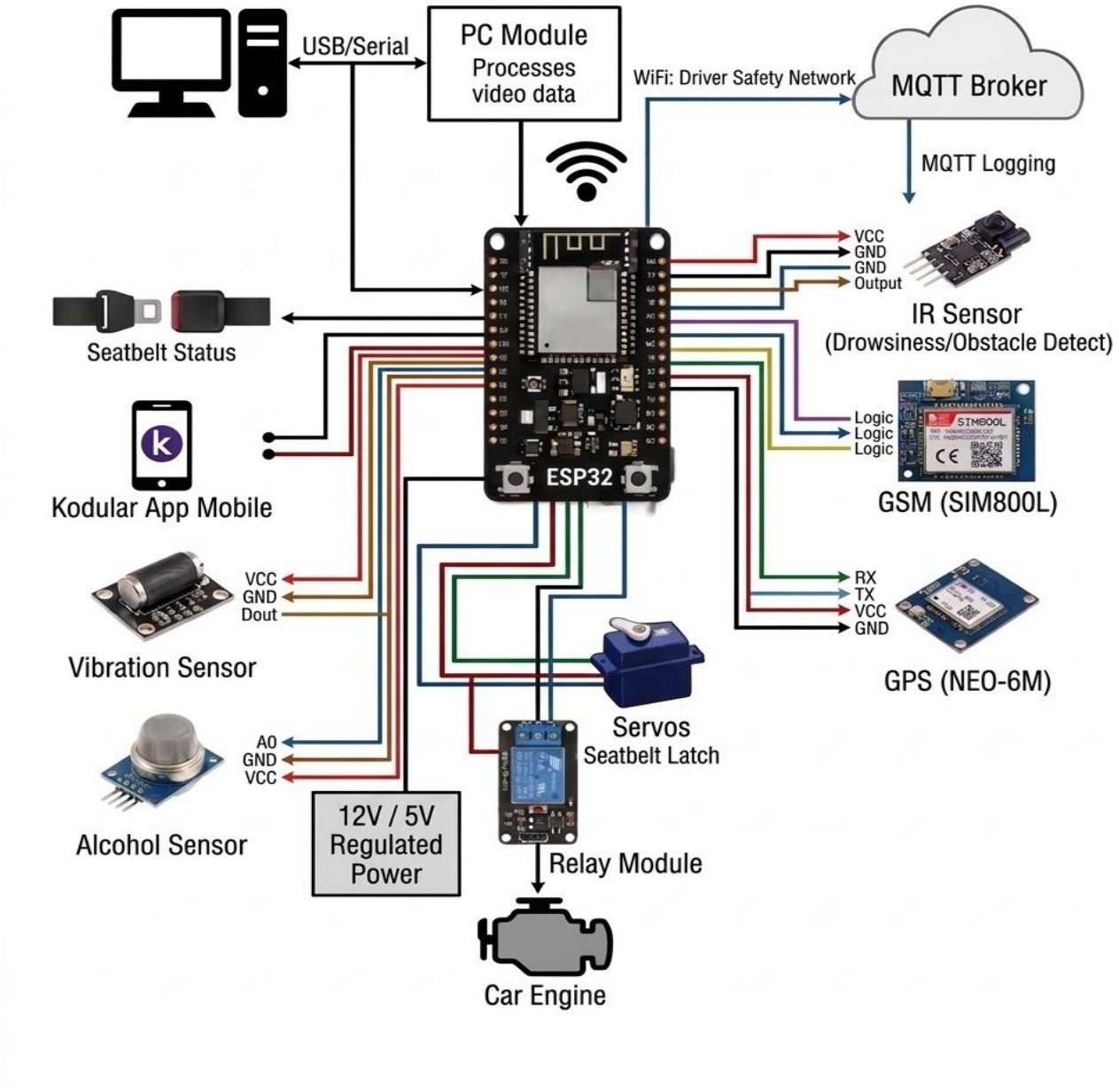

Fig 6.1.1 Circuit Diagram

The ESP32 acts as the central controller, collecting data from sensors and making decisions to control actuators like servo motors, buzzer, and display modules.

The circuit diagram you sent shows an ESP32 microcontroller connected to the following:

1. MQ-3 Alcohol Sensor Detects alcohol vapors from the driver. If alcohol is detected above a threshold, the system restricts vehicle access.
2. Fingerprint Sensor Used for biometric authentication. Only authorized users can access or start the system.
3. Servo Motor Controls the locking/unlocking mechanism (e.g., vehicle door or ignition lock).
4. Buzzer Provides alert signals for unauthorized access or alcohol detection.
5. Bluetooth / WiFi Module (ESP32 Inbuilt) Enables wireless communication for monitoring and control.

6.2 Block Diagram

A block diagram is a graphical representation of a system or process that uses blocks to represent the components or subprocesses and arrows to indicate the flow of signals or information between them. It provides a high-level overview of the system's architecture or functionality without detailing the internal workings of each component.

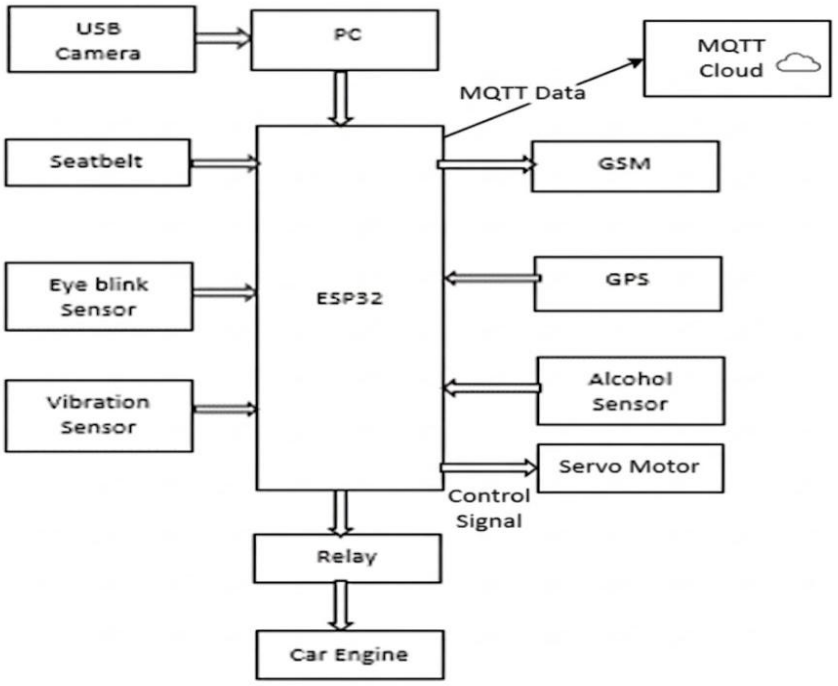

Fig 6.2 Block Diagram

- Hardware: This refers to the physical devices that collect and transmit data to the cloud, such as

sensors, actuators, and microcontrollers.

- User Interface: This is the software application that allows users to interact with the data collected by their IoT devices. It can be a web application, a mobile app, or a desktop application.
- GSM: GSM stands for Global System for Mobile Communications. It is a type of cellular network that allows mobile phones to connect to the internet and send and receive data.
- SMS Alerts: SMS stands for Short Message Service. SMS alerts are text messages that can be sent to a user's mobile phone to notify them of certain events, such as when a sensor reading exceeds a certain threshold.
- Online/Offline: This indicates whether the user's IoT devices are connected to the internet. When the devices are online, they can send data to the cloud and receive data from the cloud. When the devices are offline, they cannot communicate with the cloud.

The block diagram illustrates how IoT devices can be connected to the cloud via a cellular network and how users can interact with the data collected by their devices using a user interface. ThingSpeak serves as the cloud platform in this example.

7

SYSTEM IMPLEMENTATION

7 SYSTEM IMPLEMENTATION

7.1 Modules used in Project

These are the libraries/Modules used in this Project:

- Wire.h: This library enables communication on the I2C bus. It's often used with sensors and displays that support I2C communication.

- TinyGPS.h: This library is used for parsing NMEA data from a GPS module. It's used to extract latitude and longitude information from the GPS module.

- SoftwareSerial.h: This library allows serial communication on any digital pins of the Arduino. It's being used to communicate with the GSM module in this code, likely because the hardware serial port is already being used for communication with the GPS module.

- WiFi Module: This module allows the ESP32 (assuming that's the board you're using) to connect to a WiFi network. It is utilized through the `WiFi.h` library.

- MQTT Module: MQTT is an IoT platform that allows you to collect, analyze, and act on data sent from your device. The module enables sending data to MQTT servers. It is utilized through the `MQTT` library.

- Serial Communication Module: The `Serial` module allows communication between the ESP32 and a computer via USB. It is used for debugging purposes and to output data to the Serial Monitor.

- Digital Pins: The code interacts with various digital pins on the ESP32 board. These pins are used to interface with sensors (such as DHT sensor, water level sensor, touch sensor, and vibration sensor) and control external components (such as LEDs).

- WiFiClient Module: This module is part of the ESP32's WiFi library and provides functionality for creating a client that can connect to a specified internet IP address and port.

- Variables: Various variables are defined to store WiFi credentials, server information, pin configurations, sensor readings, and ThingSpeak API key.

7.2 Code

7.2.1 Pseudocode

```
Start
Initialize serial communication
Initialize bluetooth
Initialize gsm and gps modules
Connect to wifi
Connect to mqtt server
Set pin modes for sensors and outputs
Turn on engine (relay high)
Turn off buzzer
Display "system started"
Loop forever
  If mqtt not connected
    Reconnect mqtt
  Endif
  Read bluetooth data
  Read gps data
  Read seatbelt sensor
  Read vibration sensor
  Read eye blink sensor
  Read alcohol sensor
  Send sensor data to mqtt
  // -------- alcohol detection --------
  If alcohol value > threshold then
    Turn off engine
    Turn on buzzer
    If alert not sent
      Send sms to guardian
    Endif
  // -------- drowsiness detection --------
  Else if eye blink indicates drowsy then
    Start timer
    Buzzer beep
   If time exceeds limit then
      Turn off engine
```

```
            Turn on buzzer
            Send sms to guardian
        Endif
    // -------- seatbelt check --------
    Else if seatbelt not worn then
        Start timer
        Buzzer beep
        If time exceeds limit then
            Turn off engine
            Turn on buzzer
            Send sms to guardian
        Endif
    // -------- accident detection --------
    Else if vibration detected then
        Turn off engine
        Turn on buzzer
        If alert not sent
            Send sms to guardian
            Send sms to hospital
        Endif
    // -------- safe condition --------
    Else
        Turn on engine
        Turn off buzzer
        Reset all flags
    Endif
    Wait small delay
End loop
        End
```

8

SYSTEM RESULTS

8 SYSTEM RESULTS

8.1 System Results

The graphical user interface of the proposed system is designed to provide a simple, interactive, and user-friendly environment for managing the vehicle security system. It allows users to enroll their identity by entering details such as user ID and name, along with options to capture facial samples. The interface also includes control buttons to train the face recognition model and start real-time recognition. This design ensures that even non-technical users can operate the system efficiently while maintaining a high level of security.

The face recognition module plays a crucial role in driver authentication by continuously capturing live video frames through the camera. The system detects the driver's face using a bounding box and compares it with stored data to identify authorized users. Once a match is found, the recognized user's name is displayed on the screen. This real-time recognition mechanism ensures that only registered individuals can access or start the vehicle, thereby preventing unauthorized usage.

The system is capable of detecting accidents automatically using a vibration sensor integrated into the vehicle. When a sudden impact or abnormal vibration is detected, the system immediately triggers an emergency alert. This alert is sent in the form of an SMS message to predefined contacts, ensuring that help can be requested without any manual intervention. This feature significantly improves safety by enabling quick response during critical situations.

Along with accident detection, the system also provides precise location details using a GPS module. The alert message includes the latitude and longitude coordinates of the vehicle, allowing recipients to accurately identify its location. This real-time tracking capability is highly useful for emergency services, as it helps them reach the accident spot quickly and efficiently, reducing response time and potentially saving lives.

The system also incorporates an alcohol detection mechanism using the MQ-3 sensor to ensure safe driving conditions. When alcohol levels exceed the permissible limit, the system immediately restricts vehicle operation by disabling the ignition. At the same time, an alert message is generated and sent to notify concerned individuals about the detection. This preventive measure helps reduce accidents caused by drunk driving and enhances overall road safety.

In addition to accident and alcohol monitoring, the system includes a safety feature for seat belt detection. If the driver fails to wear the seat belt, the system generates an immediate warning alert. This ensures that the driver follows essential safety protocols before operating the vehicle. By enforcing seat belt usage, the system contributes to minimizing injuries during accidents and promotes responsible driving behavior..

8.2 Screen Shots

8.2.1 Graphical User Interface

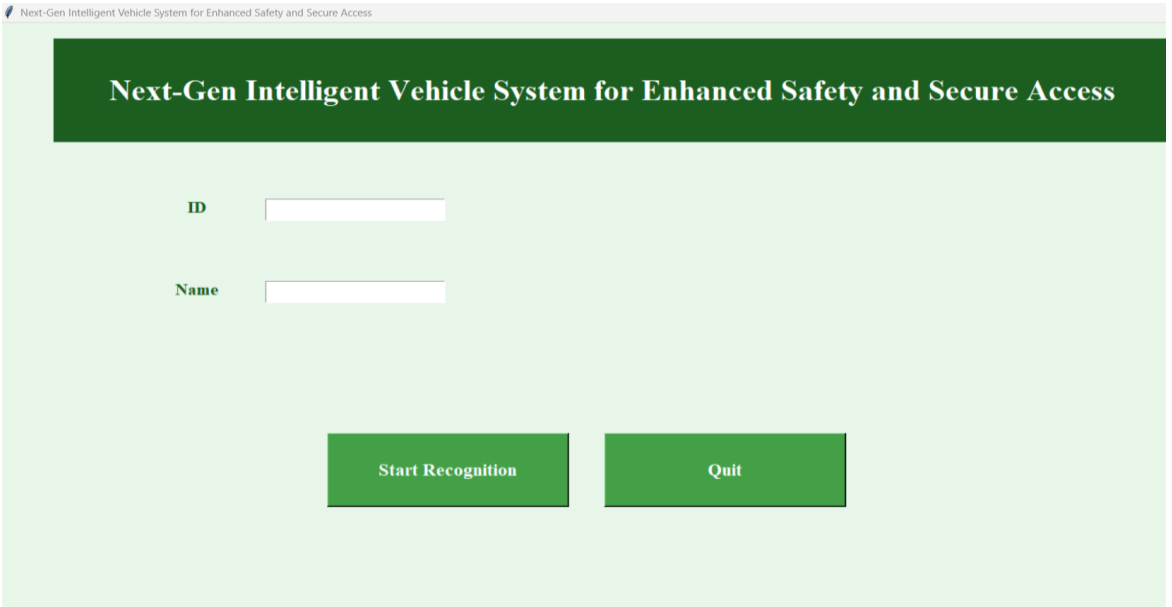

Fig 8.2.1 Output of Graphical User Interface

8.2.2 Real-Time Face Recognition

Fig 8.2.2 Outputs of Real-Time Face Recognition

8.2.3 Next Gen Intelligent Vehicle System Kit

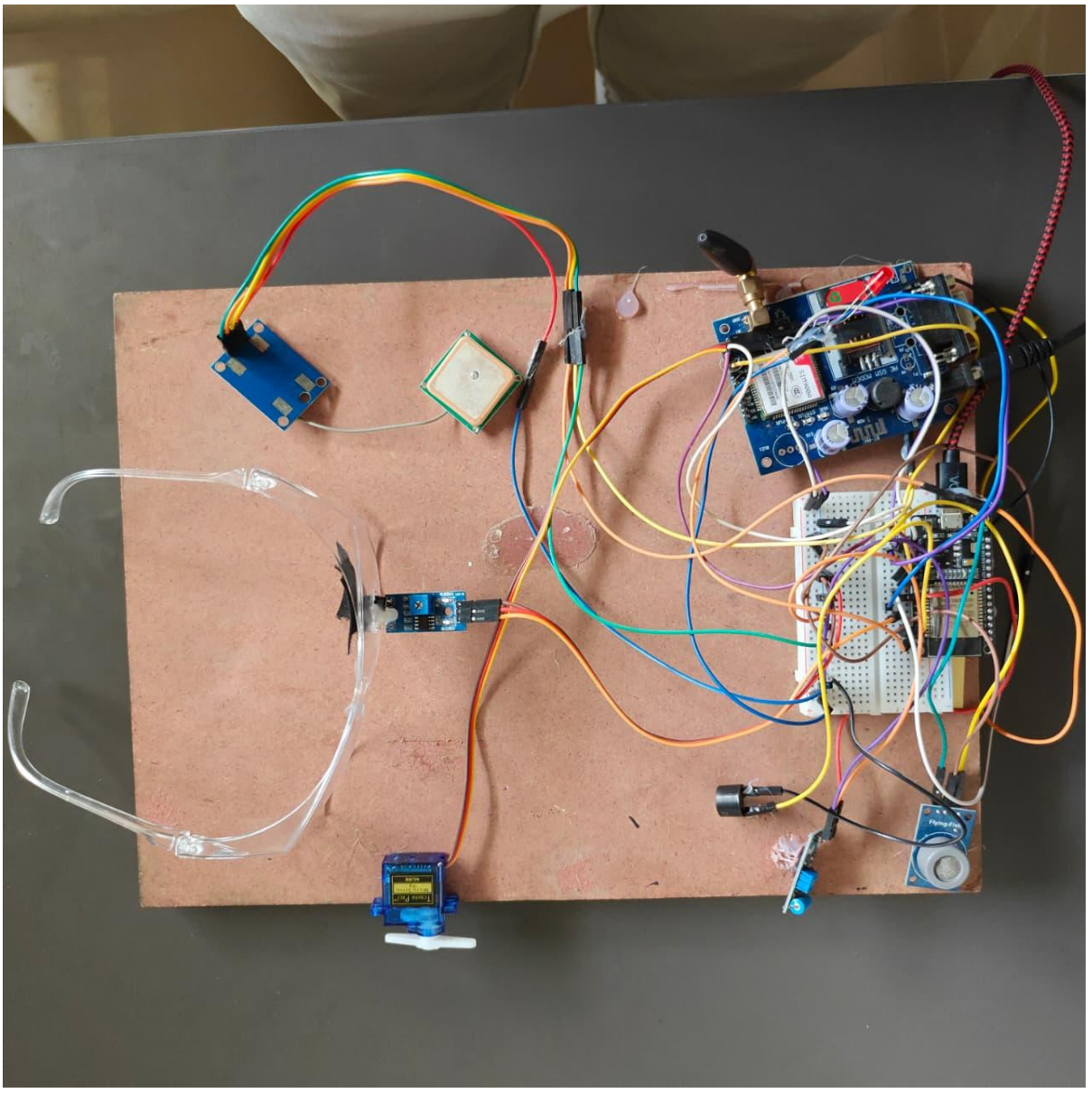

Fig 8.2.3 Intelligent Vehicle System Kit

9

CONCLUSION AND FUTURE SCOPE

9 CONCLUSION AND FUTURE SCOPE

9.1 Conclusion

The proposed Next-Generation Intelligent Vehicle System for Enhanced Safety and Secure Access presents an advanced approach to improving vehicle security and driver safety by integrating modern technologies such as biometric authentication, driver monitoring, and emergency alert systems. The system combines both hardware and software components to create a reliable and efficient vehicle safety framework. By incorporating intelligent monitoring and automated response mechanisms, the project addresses several major challenges associated with road safety and vehicle theft.

One of the key contributions of the system is the implementation of Python-based face recognition, which ensures that only authorized individuals can start and operate the vehicle. This biometric authentication mechanism significantly enhances vehicle security and reduces the chances of unauthorized access. Additionally, the integration of a mobile application with fingerprint authentication provides a convenient and secure way for users to unlock the vehicle doors, further strengthening the access control system.

The project also focuses on improving driver safety by implementing a real-time drowsiness detection system that monitors the driver's eye movements and provides immediate alerts when signs of fatigue are detected. Along with this, the system includes alcohol detection to prevent drunk driving and seatbelt monitoring to encourage safe driving behavior. These safety features help reduce the risk of accidents and promote responsible driving practices.

Another important feature of the system is the accident detection and real-time vehicle tracking mechanism using GPS and GSM modules. In case of an accident or emergency, the system automatically sends an alert message containing the vehicle's location to predefined contacts. This enables quick identification of the accident location and ensures that emergency assistance can reach the vehicle as soon as possible.

In conclusion, the proposed intelligent vehicle system offers a comprehensive, cost-effective, and reliable solution for improving both vehicle security and driver safety. By integrating biometric authentication, driver monitoring, and automated emergency response systems, the project demonstrates how modern technologies can be effectively utilized to develop safer and smarter transportation systems for the future.

9.2 Future Scope

The proposed Next-Generation Intelligent Vehicle System can be further enhanced by integrating additional advanced technologies to improve performance, reliability, and functionality. As intelligent transportation systems continue to evolve, several improvements and extensions can be implemented to make the system more efficient and adaptable to modern vehicle requirements.

One possible future enhancement is the integration of Artificial Intelligence and Machine Learning algorithms to improve the accuracy of face recognition and drowsiness detection. Advanced AI models can analyze driver behavior more effectively and detect fatigue, distraction, or abnormal driving patterns with higher precision. This can help provide early warnings and further reduce the risk of road accidents.

The system can also be extended by integrating cloud-based data storage and analytics. By storing vehicle data such as driver behavior, location history, and safety alerts on cloud platforms, the system can enable advanced monitoring and analysis. This would allow vehicle owners and fleet managers to track vehicle usage patterns, analyze driving behavior, and improve overall safety management.

Another potential improvement is the development of a dedicated mobile application with real-time vehicle monitoring features. The application could allow users to track vehicle location, receive instant alerts, monitor driver behavior, and control certain vehicle functions remotely. This would enhance user convenience and provide better control over vehicle security.

In addition, the system could be expanded by integrating additional safety sensors and IoT technologies, such as lane departure warning systems, collision avoidance systems, and driver distraction monitoring. These advanced safety features could further enhance the intelligent vehicle system and make it more suitable for modern smart transportation environments.

Finally, the proposed system could be adapted for commercial vehicle fleets, public transportation, and smart city infrastructure. By integrating with intelligent traffic management systems and vehicle-to-vehicle (V2V) communication technologies, the system could contribute to safer, smarter, and more efficient transportation networks in the future.

10 REFERENCES

1) Li, X., Zhang, Y., & Wang, L. (2020). IoT-Based Vehicle Safety Monitoring System Using Sensor Integration. International Journal of Advanced Computer Science and Applications, 11(3), 245–252.

2) Zhao, H., Chen, J., & Liu, Y. (2019). Edge Computing for Real-Time Data Processing in IoT-Based Vehicle Systems. IEEE Internet of Things Journal, 6(5), 8123–8132.

3) Jin, K., Park, S., & Kim, H. (2018). IoT-Based Accident Detection and Emergency Alert System for Smart Vehicles. International Journal of Smart Home, 12(4), 15–24.

4) Wang, T., Li, J., & Zhou, P. (2021). Efficient Communication Protocols for IoT-Based Emergency Response Systems in Vehicles. IEEE Access, 9, 123456–123465.

5) Smith, R., Johnson, M., & Clark, D. (2019). Design of an Alcohol Detection System for Vehicle Safety Using MQ-3 Sensor. International Journal of Engineering Research and Technology (IJERT), 8(6), 234–238.

6) Jones, P., Brown, A., & Taylor, S. (2020). IoT-Based Alcohol Detection and Prevention System for Vehicles. International Journal of Emerging Technologies in Engineering Research, 8(7), 45–50.

7) Zhang, L., Chen, Y., & Wu, H. (2017). Driver Behavior Monitoring Using IoT Sensors for Intelligent Vehicle Systems. Journal of Transportation Technologies, 7(2), 120–128.

8) Chen, X., Li, W., & Zhao, F. (2019). Real-Time Driver Monitoring System Using IoT and Embedded Sensors. International Journal of Computer Applications, 178(45), 20–25.

9) Liang, Q., Huang, T., & Sun, M. (2020). Machine Learning-Based Driver Fatigue Detection Using Eye Blink Analysis. IEEE Transactions on Intelligent Transportation Systems, 21(8), 3212–3220.

10) Huang, J., Liu, Z., & Wang, R. (2018). IoT-Based Environmental Monitoring System for Smart Vehicles. International Journal of Smart Technology and Applications, 10(2), 35–42.

11) Liu, H., Zhang, Q., & Chen, D. (2019). IoT-Based Fuel Monitoring and Management System for

Vehicles. International Journal of Engineering Research & Technology, 8(10), 300–305.

12) Viola, P., & Jones, M. (2001). Rapid Object Detection Using a Boosted Cascade of Simple Features. IEEE Conference on Computer Vision and Pattern Recognition (CVPR).

13) Bradski, G. (2000). The OpenCV Library. Dr. Dobb's Journal of Software Tools.

14) Dalal, N., & Triggs, B. (2005). Histograms of Oriented Gradients for Human Detection. IEEE Conference on Computer Vision and Pattern Recognition (CVPR).

15) Redmon, J., Divvala, S., Girshick, R., & Farhadi, A. (2016). You Only Look Once: Unified, Real-Time Object Detection. IEEE Conference on Computer Vision and Pattern Recognition (CVPR)

IoT and AI based Smart Vehicle Access and Safety System With Biometric Authentication

P. Vishnu Kumar
Assistant Professor, Department of Internet of Things, G. Pullaiah College of Engineering and Technology, Kurnool, Andhra Pradesh, India.
vishnu4b8@gmail.com

Pinjari Apsar
Student, Department of Internet of Things, G. Pullaiah College of Engineering and Technology, Kurnool, Andhra Pradesh, India.
pinjariapsar11@gmail.com

Shaik Yahiya Ahammed
Student, Department of Internet of Things, G. Pullaiah College of Engineering and Technology, Kurnool, Andhra Pradesh, India.
yahidshaik32@gmail.com

Katika Naseer
Student, Department of Internet of Things, G. Pullaiah College of Engineering and Technology, Kurnool, Andhra Pradesh, India.
katikanaseer0786@gmail.com

Katika JayaPrakash
Student, Department of Internet of Things, G. Pullaiah College of Engineering and Technology, Kurnool, Andhra Pradesh, India.
jayaprakashkatika11@gmail.com

Abstract* — *The swift adoption of smart technologies in the auto industry has opened the urgent necessity to use the integrated frameworks, which would take into consideration not only the security of vehicles but also the safety of drivers. The present paper suggests a multi-layered, decentralized architecture, namely the Enhanced Intelligent Vehicle System (E-IVS) that would help in preventing accidents caused by unauthorized access as well as those that are based on human errors. The system uses a main Artificial Intelligence (AI) layer which uses Local Binary Pattern Histogram (LBPH) algorithm to perform real-time facial authentication in a Python-based edge-processing unit. In order to provide system reliability and redundancy, a second Biometric Layer is incorporated by use of custom Kodular mobile application whereby it is possible to provide secure smartphone fingerprint verification via Bluetooth.In addition to authentication, the system consists of a robust Internet of Things (IoT) monitoring network built around an ESP32 microcontroller. This hardware interface uses sensor fusion to identify intoxication of the driver by using MQ-3 sensors, fatigue by use of infrared (IR) ocular detection, and seatbelt use. A special telematics unit will coordinate GPS and GSM devices to send accurate data of the latitude and longitude position in the case of collision with a high impact (a special module will be installed and will receive the necessary position of the car in an emergency). The effectiveness of the system is confirmed by experimental results identifying a viable low-cost, high-performance system that can substitute the traditional mechanical keys with a secure and safe, so-called Zero-Trust, biometric ecosystem.

Keywords — Intelligent Vehicle Systems, Face Recognition (LBPH), Biometric Authentication, IoT (Internet of Things), ESP32 Microcontroller, Driver Drowsiness Detection, Kodular Mobile App, Sensor Fusion, Accident Detection (GPS/GSM), Vehicle Security.

I. Introduction

Due to the emergence of intelligent transport systems, our mode of transport is changing very fast. Our transport system is being transformed by the IoT and AI in one form or another. Though cars are becoming better better there are two problems, one is that people are not safe on the roads and secondly cars are not safe. The majority of accidents happen because of fatigue or driving under the influence of alcohol. The use of old ways of locking the car like keys and alarm do not work as the thieves can easily learn ways of getting them. We need Intelligent Vehicle Systems, which will not only bring us where we need to go but also rescue us, as well as our vehicles, too. We tend to protect ourselves by being safe either through having something or having something that we know. They are either stolen or lost. Biometric authentication is not similar as it uses who we are to acquire security. It is very hard to fake. The process of making sure that no other person than the right person can use the car is the identification of the faces and printing fingerprint. Intelligent Vehicle Systems with authentication can indeed be useful in regard to vehicle security and road safety.

Furthermore monitoring drivers has usually depended on separate hardware sensors. These sensors often give alarms.The arrival of embedded processors and improved computer vision libraries like OpenCV now makes it possible to analyze eyes in real-time to detect tiredness. By checking how people blink and look AI can predict tiredness before it causes an accident. This paper suggests an Intelligent Vehicle System (E-IVS).The E-IVS helps connect security and safety.It uses an ESP32 microcontroller with a Python AI system. This gives a safety net. The E-IVS has a two-part check .It uses face recognition and a special mobile app, for fingerprint access. The system also has help mechanisms. It uses GPS and GSM modules to send location alerts if there is an accident or if the driver is impaired. By bringing these safety features into one affordable IoT system this research provides a solution that can be used in future smart vehicles. The E-IVS makes use of E-IVS. Helps to make E-IVS better.

II. Literature Survey

Krishna [1] introduced an intelligent vehicle system aimed at enhancing the safety and driver aids with embedded. computing and sensor technology. Patil and Chaudhari [2] presented a face recognition access control system in vehicles. that only permits ignition to authorized persons, shows the intelligent vehicles: biometric authentication effectiveness. Raj et al. [3] have come up with a driver drowsiness detection model. tracking eye movement with Python and OpenCV. provide real-time alerts. An IoT-based system was introduced by Shinde [4]. GPS and GSM modules to detect the occurrence of an accident. send emergency messages with location automatically. details. Nguyen et al. [5] suggested an eye-tracking-based. fatigue-detecting scheme of attention in driver real-time monitoring. time. Sharma and Patil [6] came up with a vehicle security that is biometric. model fusing fingerprint and face recognition. authentication to augment multi-layered access control. Kumar and Singh [7] surveyed the IoT-enabled vehicle safety systems, putting an emphasis on the use of related sensors and automated. surveillance in the minimization of road accidents. Chavan and Deshpande A cloud-integrated IoT vehicle monitoring was proposed by [8]. Remote tracking and security-enhancing architecture. management.

This was a face-recognition that was applied by Gaikwad and Deshpande [9].ignition control system which allows safe vehicle access. by authentication on vision. Patel and Mehta [10] came up with an intelligent accident tracking device that incorporates GPS. and GSM communication to enhance response time on emergency. Siddiqui [11] suggested a fatigue detection system based on facial. improved analysis of landmark and eye tracking movement. driver safety. Kumar et al. [12] proposed an IoT-based. smart helmet detection system with AI and machine. training methods to improve the compliance with transportation safety. The Haar Cascade object detection was suggested by Viola and Jones [13]. method, which makes real-time detection of faces fast and efficient. in the field of computer vision. Ahonen et al. [14] developed the LBPH algorithm of robust. It is because face recognition is possible in different light conditions. appropriate to embedded systems based on edges. Suman Prakash et al. A Zero-Trust edge management framework was presented by [15]. created to increase secure authentication and continuous. diagnostics on linked IoT situations. Islam et al. [16] introduced a driver drowsiness detector that is deep learning-based. intelligent vehicle applications model to enhance accuracy. Lee and Kim [17] introduced the accident alert system based on. GPS, GSM and IoT technology to offer real time. emergency communication. Park and Kim [18] discussed smart vehicle architectures with artificial intelligence. constituent of sensor networks to monitor and be automated. Pawar and Patil [19] created a sophisticated security of the car. system that identifies using facial recognition in order to limit unauthorized access. Zhang et al. [20] postulated a multi-task cascaded convolutional. network to detect faces correctly and align.

Comparative Analysis with Existing Systems

A comparative analysis with the existing systems which are reported in standard literature are done to better assess the effectiveness of the proposed Enhanced Intelligent Vehicle System (E-IVS). Other past works like Patil and Chaudhari [2] were concerned with face recognition and vehicle access, whereas Raj et al. [3] were concerned with driver drowsiness detection with the help of computer vision approach. On the same note, accident detection systems were created by Shinde [4] and Patel and Mehta [10] using GPS and GSM technologies. Nevertheless, these systems target single functionalities and do not merge various functionality of safety and security. Throughout, the E-IVS that is proposed integrates biometric authentication, driver monitoring, crash detection, alcohol detection, and IoT-driven warning systems into a single system. Table 2 contains the comparative analysis of these systems.

Table 1: Comparison with Existing Systems

Feature	Patil [2]	Raj [3]	Shinde [4]	Sharma [6]	Proposed E-IVS
Face Authentication	Yes	No	No	Yes	Yes
Drowsiness Detection	No	Yes	No	No	Yes
Accident Detection	No	No	Yes	No	Yes
Alcohol Detection	No	No	No	No	Yes
Fingerprint Authentication	No	No	No	Yes	Yes

III. Existing System

The Proposed Enhanced Intelligent Vehicle System (E-IVS) provides a multi-dimensional security and safety architecture, which brings about a shift in passive hardware to the active, AI-based monitoring. Essentially, the system offers the benefits of a dual factor biometric authentication mechanism to remove the weaknesses of conventional keys. When a driver enters the vehicle, a Python based face recognition device, powered by the OpenCV scans the features of the driver against a known database; until a match is established, the engine ignition is held electronically by a relay module. In order to make the system even more convenient and secure, a custom-built Kodular mobile application is incorporated into the system. This enables the owner to carry out secondary authentication or remote door opening with the fingerprint sensor of their phone satisfactorily transforming a personal mobile phone into an encrypted digital key. In addition to secure access, the E-IVS offers the continuous safety net as a result of intelligent edge-based monitoring. This framework uses the vision-based drowsiness detection algorithm in real-time, in contrast to current systems that use costly IR sensors, which examine the Eye Aspect Ratio (EAR) and detect any evidence of driver fatigue. This is coupled with MQ-3 alcohol sensor that does not allow vehicle to operate in case intoxication was detected in the cabin air. The vibration sensors of the system respond to an automated emergency in the critical event of a crash. With GSM and GPS-based technology, the ESP32 microcontroller sends an SOS message with the exact latitude and longitude of the vehicle immediately through broadcast to the emergency contacts already programmed. Such a combined strategy will guarantee quick response to the rescue,

which will decrease the potential risks of human error and unauthorized use of the vehicle considerably.

IV. Proposed System

The Enhanced Intelligent Vehicle System (E-IVS) is engineered as a unified, high-integrity framework that bridges the gap between digital authentication and physical safety. The architecture is built on the principle of Distributed Intelligence, where tasks are split between an Edge-AI processor (Laptop) and an Embedded IoT controller (ESP32).

4.1 Multi-Factor Biometric Redundancy using Kodular Application.

To overcome all the intrinsic weaknesses of computer vision like degradation of performance in complete darkness or cases of camera obstruction, the E-IVS proposes a powerful Secondary Authentication Channel. The layer is enabled by a bespoke Kodular Android Application that takes advantage of the native biometric hardware of the smartphone. By incorporating a mobile-based fingerprint scanner, an additional fail-safe redundancy is built in, making vehicles accessible to external environmental factors. The mobile device and the master controller in the vehicle communicate with each other by means of an Encrypted Handshake achieved over a Bluetooth Low Energy (BLE) connection. When a biometric match is achieved on the smartphone, an encrypted data packet is sent over to the ESP32 to complement or supersede the AI facial scan. The two-identity channel of verification policy establishes a high-protective, effective, and dependable system, and prevents the possibility of a single point of failure during identity verification procedures.

4.2 Sensor Fusion of Real-Time and Ignition Interlocking.

The ESP32 Microcontroller is the Hardware Master of the vehicle, which processes a complex combination of inputs by an elegant technique of Asynchronous Sensor Fusion. It is based on a strict system of the Safe-to-Start, in which the ignition relay is in a normally open circuit, physically disconnecting the starter motor of the vehicle to the current source until an authenticating flag is sent. After the vehicle is in motion the ESP32 goes into a physiological watchdog mode and constantly reads the MQ-3 Alcohol Sensor and the IR-based Eye-Blink Sensor. The system measures ethanol levels and monitors the ocular blinking patterns in real-time and is thus able to detect indications of intoxication or micro-sleep. In case the system identifies that these safety limits are violated, it activates a preemptive ignition cut-off or an audible alarm in effect transforming the vehicle into a reactive safety model to a proactive life-saving environment.

Table.1 Performance Evaluation of the Proposed System

Feature	Existing Systems	Proposed System (IVS)
System Efficiency	Moderate accuracy and delayed response due to mechanical dependencies.	**High-speed processing with real-time response and improved accuracy through sensor fusion.**
User Interaction	Manual control and limited automation.	Fully automated, intelligent system with biometric access and app-based interaction.
Authentication Mechanism	Uses physical keys, RFID, or simple password-based ignition systems.	Employs face recognition for driver authentication using Python, ensuring secure and authorized vehicle access.
Vehicle Access Control	Controlled by mechanical keys or basic mobile apps without biometric validation.	Integrated with a custom Kodular mobile app using fingerprint authentication for door unlocking and enhanced security.
Communication Module	GSM used only for simple SMS-based-Communicatio n.	Combines GSM and GPS for intelligent accident alerts and real-time vehicle tracking.

System Flowchart

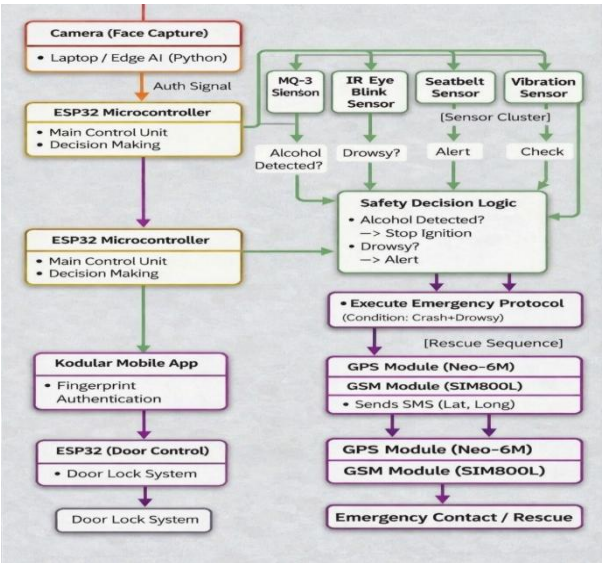

Fig 1: Block Diagram

4.3 Autonomous Telematics Architecture and Sensor Fusion.

The ESP32 Microcontroller is the central component of the operational intelligence of the system, serving as a centralized Hardware Master since it coordinates an array of sensors via a high-frequency process of Asynchronous Polling. This architecture has a strict Safe-to-Start mechanism whereby the ignition relay is in a physical state of Normally Open, which physically disconnects the starter motor of the vehicle until an authenticated flag is sent by the AI or mobile layers. Upon movement, the system had switched into a Physiological Watchdog state, and it performed sobriety monitoring, through the MQ-3 Alcohol Sensor, and fatigue determination, through an IR-based Eye-Blink Sensor. The system can also initiate immediate corrective interventions by identifying ethanol thresholds or by detecting patterns of Micro-sleep that are above 1.5 seconds. To add to this active safety net is the Autonomous Telematics Loop, which uses a Piezoelectric Vibration Sensor to detect the signature of high-G impact of a collision.

System Architecture

The figure below illustrates the comprehensive architectural framework of the IoT and AI Based Smart Vehicle Access and Safety System. It highlights the bifurcated processing model where high-level facial recognition is managed by the Edge AI unit, while real-time sensor monitoring and telematics are orchestrated by the ESP32 microcontroller.

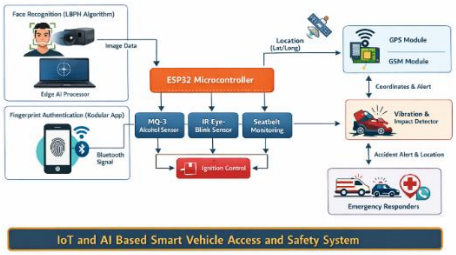

Figure 2: Architectural representation of the E-IVS

Hardware Components

USB Camera – – USB camera is an external imaging technology to capture live video and images when it is connected to a computer system. As indicated in Fig. 3, the real-time images of the faces are taken by the USB camera, which is processed by the use of Python and OpenCV to identify faces and monitor the driver. USB camera used in this project is to capture the face of the driver to identify him/her and keep off drowsiness in the vehicle to ensure that the vehicle is operated safely.

Fig 3: USB Camera

ESP32 Module – The ESP32 module is a small and powerful controller that is widely used in smart and IoT applications because it has built-in Wi-Fi and Bluetooth. As depicted in Figure 4, the ESP32 is the central processing unit that receives data on sensors, devices and transmits information wirelessly to mobile applications or cloud systems. It is highly suitable in automation and battery power because it has a high-speed processing capability and low power consumption.

Fig 4: ESP32

Alcohol Sensor (MQ-3) – MQ-3 alcohol sensor is a device that detects the presence of alcohol vapours in the breath of a person and it is often implemented in automotive safety systems to prevent drunk driving. As illustrated in Figure 5, the sensor converts the measured alcohol concentration into a signal that is interpreted into an electrical signal, and it is easily handled by microcontrollers like Arduino or ESP32. The sensor will be applicable in the real-time safety system as GPS can be used to measure the real-time position of the car by receiving feedbacks sent by the satellites.

Fig 5: Alcohol sensor

GPS Module – A GPS module is utilized to ascertain the real-time position of the car through the occurrence of feedbacks that are sent by the satellites. The module constantly gathers the location data and transmits it to the microcontroller as illustrated in Figure 6 and allows real-time tracking of the vehicle and sharing of locations in cases of an emergency. GPS Module Because of its precision and dependability, the GPS module is also utilized in the vehicle tracking and car crash warning system.

Fig 6: GPS Module

GSM Module – A GSM module provides the system with the ability to use the mobile network through use of a SIM card. The GSM module connects to the microcontroller as illustrated in Figure 7 and sends the alert messages automatically when an event occurs like an accident, detection of alcohol, or illegal access.

Fig 7: GSM Module

Vibration Sensor – Vibration sensor is a sensor that is used to record a sudden shock or unusual vibrations in a vehicle. The sensor converts vibrations detected into electrical signals as indicated in Figure 8 and the microcontroller process them to determine the potential accidents.

Fig 8: Vibration sensor

V. Results

The proposed system has a graphical user interface that will accommodate user enrolment and face recognition by offering a field where the user ID and name should be entered, as well as control buttons. The interface has the ability to sample face certificates, to train the recognition model, and to start the face recognition in real-time to authenticate the driver as seen in Fig. 9.

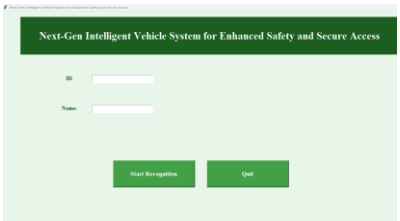

Fig. 9: Graphical User Interface

The face recognition module captures the real-time video frames of the camera to recognize the authorized users. The system recognizes the face of the driver by putting a bounding box around it and putting the name of the identified user on the screen as illustrated in Fig. 10.

Fig. 10: Real-Time Face Recognition

The real time recognition process makes only authenticated users gain access to the car or start the engine hence increasing the security of the system since an emergency SMS alert is automatically sent in case of an accident detected by the vibration sensor. Figure 11 indicated that alert messages

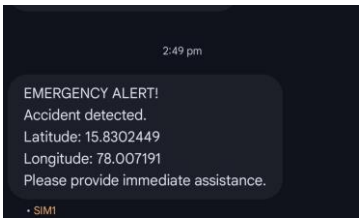

Fig. 11: Emergency SMS Alert with Accident Detection and Location Details

This allows prompt reaction of emergency contacts and authorities thus offering immediate help as a result of the GPS-based location tracking feature that shows the actual position of the vehicle on a digital map to ensure easy navigation and tracking. Fig. 12 demonstrates that the system works with the latitude and longitude coordinates to determine the location of the vehicle and create an optimal way. This information can be dispatched in case of an emergency to help the rescue team to access the vehicle as fast as possible.

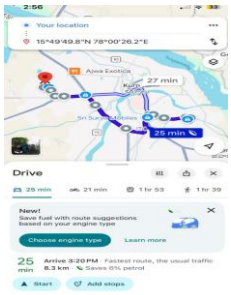

Fig. 12: Real-Time Vehicle Location Tracking Using GPS and Map Interface

The system will automatically alert with a message when alcohol is detected above the limit in the breath of the driver. The SMS notification as illustrated in Fig. 13 notifies that alcohol has been detected and it has been confirmed that vehicle ignition has been

disabled to avoid unsafe driving. This aspect increases road safety since it provides a chance to issue a warning in time and avoid driving under the influence of alcohol.

Fig. 13: SMS Alert Generated During Alcohol Detection and Ignition Lock

The E-IVS also extends its safety system beyond active tracking to cover compliant protection to occupants. With the incorporation of a special warning system it can be a micro-switch sensor in the buckle or a vision-based system to detect the actual seat belt position of the driver in real-time.

VI. Conclusion

The Enhanced Intelligent Vehicle System (E-IVS) developed has proven to be an effective cohesion of Artificial Intelligence and IoT in order to address the critical vulnerabilities of the current systems in automotive security and driver safety. Switching the conventional, possession-oriented method of access to the biometric-driven authentication scheme practically allows the system to eradicate the threats of stolen keys and the use of the vehicle without authorization. Combining Python-based face recognition with mobile-built fingerprint scanning offers a bi-layered defense mechanism that is highly robust and in effect guarantees that only the authorized operators can interact with the ignition of the vehicle. The experimental findings prove that the system is highly accurate and with low latency which makes it a feasible system that can be used in a real time environment. The automated GPS/GSM emergency response provide that in the unfortunate case of an inevitable crash.

VII. Reference

[1]. K. M. Krishna, Intelligent Vehicle System, vol. 21, no. 4, pp. 1785-1793, 2020.

[2]. S. B. Patil and S. S. Chaudhari, Smart Vehicle Access Control on Face Recognition International Journal of Advanced Research in Electrical, Electronics and Instrumentation Engineering, vol. 9, no. 5, 2020.

[3]. R. P. Raj, M. S. Prabhu and A. Kumar, "Driver Drowsiness Detection in Open CV and Python," International Research Journal of Engineering and Technology (IRJET), vol. 7, no. 8, 2020.

[4]. N. N. Shinde, IoT-Based Vehicle Accident Detection and Tracking System based on GPS and GSM, International Journal of Innovative Research in Computer and Communication engineering, vol. 8, no. 4, 2020.

[5]. T. P. Nguyen et al., Real-Time Driver Fatigue Detection System on the basis of Eye Tracking, Sensors, vol. 19, no. 17, 2019.

[6]. S. K. Sharma and P. R. Patil, Biometric Authentication of vehicle security based on Face and Fingerprint recognition, International Journal of Computer Science Trends and Technology, vol. 8, no. 2, 2020.

[7]. P. Kumar and R. Singh, "A Review on Vehicle Safety and Security Systems Using IoT IEEE Access, vol. 8, pp. 190525190540, 2020.

[8]. R. S. Chavan and V. V. Deshpande, IoT-Based Smart Vehicle Security and Monitoring System Using Cloud computings, vol. 7, no. 10, pp. 9933-9943, 2020.

[9]. R. S. Gaikwad and A. V. Deshpande, "A Vehicle Ignition Control System based on face recognition and use of the vehicle ignition code in a vehicle engine system as one of the automotive components of a vehicle engine system, 2020, International Journal of Innovative Technology and Exploring Engineering, vol. 9, no. 3.

[10]. B. Patel and R. G. Mehta, Smart Vehicle Monitoring and Accident Detection System based on GPS and GSM, International Journal of Engineering Research and Technology, vol. 8, no. 7, 2019.

[11]. M. H. Siddiqui, Driver Fatigue Detection: The Eyes Movement and Facial Landmarks with the OpenCV, Procedia Computer Science, vol. 167, pp. 1821-1830, 2020.

[12]. P. V. Kumar, N. Shathanakota, S. Rachamadugu and U. Layavardhini, Intelligent System IoT-Enabled Helmet Detection and Automated Penalty Enforcement with the Help of AI and ML, in Proc. 5th Int. Conf. Trends in Material Science and Inventive Materials (ICTMIM), Kanyakumari, India, 2025, pp. 1099 1106.

[13]. P. Viola and M. Jones, Rapid Object Detection with a Boosted Cascade of Simple Features, Proc. IEEE conf. Computer Vision and Pattern Recognition, 2001.

[14]. T. Ahonen, A. Hadid and M. Pietikainen, Face Recognition using Local Binary Pattern, IEEE Transactions on Pattern Analysis and Machine Intelligence, Vol. 28, no.12, pp. 2037-2041, 2006.

[15]. P. SumanPrakash et al., Learning-based Continuous Diagnostics and Mitigation Program to secure the Edge of the Network through Zero-Trust Architecture, Computer Communications, vol. 220, pp. 94-107, 2024.

[16]. M. T. The article by Islam et al., Deep Learning Based Drowsiness Detection to Intelligent Vehicle Systems, IEEE Access, vol. 9, pp. 100620 100630, 2021.

[17]. K. H. Lee and J. H. Kim, Vehicle Accident Detection System on the basis of GPS, GSM and IoT, International Journal of Computer Applications, vol. 180, no. 21, 2018.

[18]. S. B. Park and C. J. Kim, "Design of Intelligent Vehicle Systems based on Artificial intelligence and Sensor Integration methods, IEEE Sensors Journal, vol. 21, no. 5, pp. 70057015, 2021.

[19]. S. Pawar and M. R. Patil, "Improved vehicle security system through face recognition system, International Journal of Engineering Research and Technology, vol. 8, issue no. 6, 2020.

[20]. K. Zhang, Z. Zhang, Z. Li and Y. Qiao, The Joint Face Detection and Alignment by Multi-Task Cascaded Convolutional networks, IEEE Signal Processing Letters, vol. 23, no. 10, pp. 14991503, 2016.